E11530

Mounting clip

MOUNTING CLIP V4A D12 MM

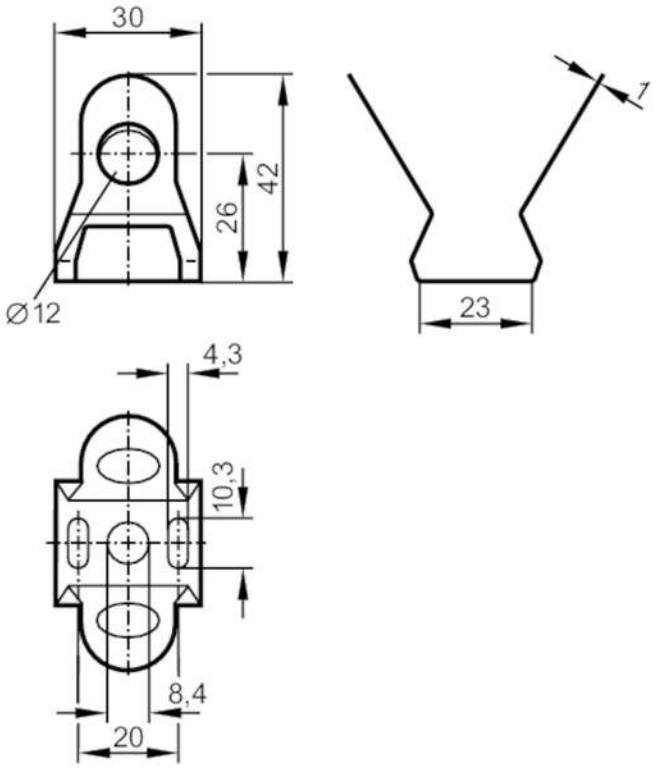

Application		
Design		for smooth-body units Ø 12 mm
Mechanical data		
Weight	[g]	14.7
Dimensions	[mm]	Ø 12
Materials		stainless steel (1.4404 / 316L)
Remarks		
Pack quantity		1 pcs.
Diagrams and graphs		