NN5020

Induktiver NAMUR-Sensor

IN-2004-N/10M/1D/1G/2G

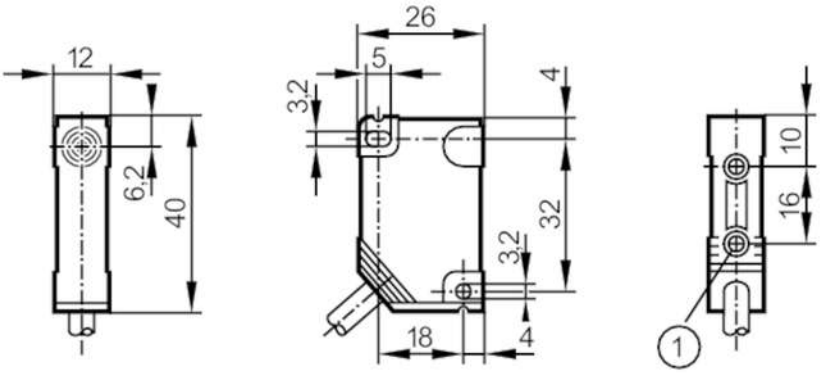

1 threaded bush M3 Depth 5.8 mm
Tightening torque maximum 1.2 Nm screw fixing class 8.8
when brass insert in contact with counterpart

Product characteristics		
Electrical design		NAMUR
Output function		normally closed
Sensing range	[mm]	4
Housing		rectangular
Dimensions	[mm]	40 x 12 x 26
Electrical data		
Connection to switching amplifiers		yes
Switching amplifiers		connection to certified intrinsically safe circuits with the max. values: U = 15 V / I = 50 mA / P = 120 mW
Nominal voltage DC	[V]	8.2; (1kΩ)
Supply voltage DC	[V]	7.5...30; (when used outside the hazardous area)
Current consumption	[mA]	< 1; (disabled; conductive: > 2,1)
Protection class		II
Outputs		
Electrical design		NAMUR
Output function		normally closed
Permanent current rating of switching output DC	[mA]	30; (when used outside the hazardous area)
Switching frequency DC	[Hz]	400
Detection zone		
Sensing range	[mm]	4
Real sensing range Sr	[mm]	4 ± 10 %
Accuracy / deviations		
Correction factor		steel: 1 / stainless steel: 0.7 / brass: 0.5 / aluminium: 0.4 / copper: 0.3
Hysteresis	[% of Sr]	1...15
Switch point drift	[% of Sr]	-10...10

NN5020

Induktiver NAMUR-Sensor

IN-2004-N/10M/1D/1G/2G

Operating conditions		
Ambient temperature	[°C]	-20...80
Protection		IP 67
Tests / approvals		
Approval		PTB 01 ATEX 2191; BVS 04 ATEX E153; IECEx BVS 06.0003
ATEX marking		II 1G Ex ia IIB T6 Ga
		II 2G Ex ia IIC T6 Gb
		II 1D Ex ia IIIC T 90°C Da
EMC		EN 60947-5-6
Shock/vibration resistance		30 g (11 ms) / 10-55 Hz (1 mm)
MTTF	[years]	4899
Safety classification		
Max. internal capacitance	[nF]	112
Max. internal inductance	[µH]	143
Mechanical data		
Weight	[g]	447
Housing		rectangular
Mounting		non-flush mountable
Dimensions	[mm]	40 x 12 x 26
Materials		PBT
Remarks		
Pack quantity		1 pcs.
Electrical connection		

Cable: 10 m, PVC; 2 x 0.5 mm²

Connection

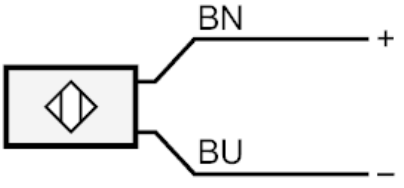

Core colours :
BN = brown
BU = blue