# KQ5100

## Capacitive sensor

KQ-3120NFPKG

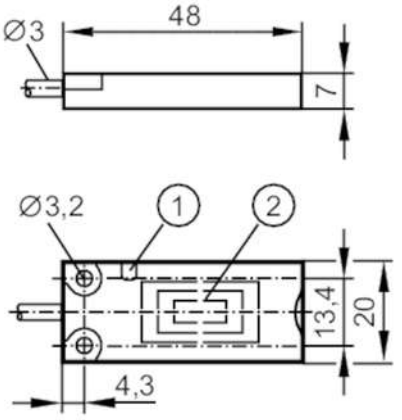


1 LED
2 Sensing face

| | | |
|---|---|---|
| **Product characteristics** | | |
| Electrical design | | PNP |
| Output function | | normally open / normally closed; (selectable) |
| Sensing range | [mm] | 12 |
| Communication interface | | IO-Link |
| Housing | | rectangular |
| Dimensions | [mm] | 20 x 7 x 48 |
| **Electrical data** | | |
| Operating voltage | [V] | 10...30 DC |
| Current consumption | [mA] | < 17 |
| Protection class | | III |
| Reverse polarity protection | | yes |
| Measuring principle | | capacitive |
| **Outputs** | | |
| Electrical design | | PNP |
| Output function | | normally open / normally closed; (selectable) |
| Max. voltage drop switching output DC | [V] | 2.5 |
| Permanent current rating of switching output DC | [mA] | 100 |
| Switching frequency DC | [Hz] | 10 |
| Short-circuit protection | | yes |
| Overload protection | | yes |
| **Detection zone** | | |
| Sensing range | [mm] | 12 |
| Real sensing range Sr | [mm] | 12 ± 10 % |
| **Accuracy / deviations** | | |
| Hysteresis | [% of Sr] | 1...15 |
| Switch point drift | [% of Sr] | -20...20 |

# KQ5100

## Capacitive sensor

KQ-3120NFPKG

| | | | |
|---|---|---|---|
| **Software / programming** | | | |
| Parameter setting options | | only via IO-Link | |
| **Interfaces** | | | |
| Communication interface | | IO-Link | |
| Transmission type | | COM1 (4,8 kBaud) | |
| IO-Link revision | | 1.1 | |
| SDCI standard | | IEC 61131-9 CDV | |
| Profiles | | Smart Sensor | |
| SIO mode | | yes | |
| Supported DeviceIDs | | Type of operation | DeviceID |
| | | Default | 371 |
| **Operating conditions** | | | |
| Ambient temperature | [°C] | -40...80 | |
| Protection | | IP 65; IP 67; IP 69K | |
| **Tests / approvals** | | | |
| EMC | | EN 61000-4-2 | 8 kV AD |
| | | EN 61000-4-3 | 10 V/m |
| | | EN 61000-4-4 | 2 kV |
| | | EN 61000-4-6 | 3 V |
| | | EN 55011 | class B |
| Vibration resistance | | EN 60068-2-6 Fc | (10...55 Hz) / 1 mm amplitude, oscillation period 5 min., 30 min. per axis at resonance or 55 Hz |
| Shock resistance | | EN 60068-2-27 Ea | 30 g 6 shocks / 11 ms half-sine (x, y, z) |
| MTTF | [years] | 771 | |
| UL approval | | Ta | -25...80 °C |
| | | Enclosure type | Type 1 |
| | | power supply | Class 2 |
| **Mechanical data** | | | |
| Weight | [g] | 36.7 | |
| Housing | | rectangular | |
| Mounting | | non-flush mountable | |
| Dimensions | [mm] | 20 x 7 x 48 | |
| Materials | | PBT; TPE-U; stainless steel | |
| **Displays / operating elements** | | | |
| Display | | switching status | 1 x LED, yellow |
| **Remarks** | | | |
| Pack quantity | | 1 pcs. | |

# KQ5100

## Capacitive sensor

**KQ-3120NFPKG**

## Electrical connection

Cable: 2 m, PUR; 3 x 0.14 mm²

### Connection

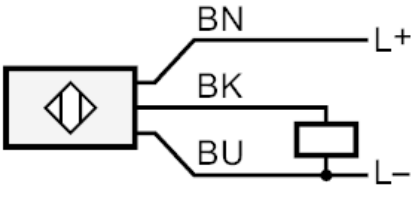


| | |
|---|---|
| BK: | OUT / IO-Link |
| | Core colours : |
| BK = | black |
| BN = | brown |
| BU = | blue |