IFT241

Inductive sensor

IFKC007-ASKG/M/V4A/0,9M/PH/AS

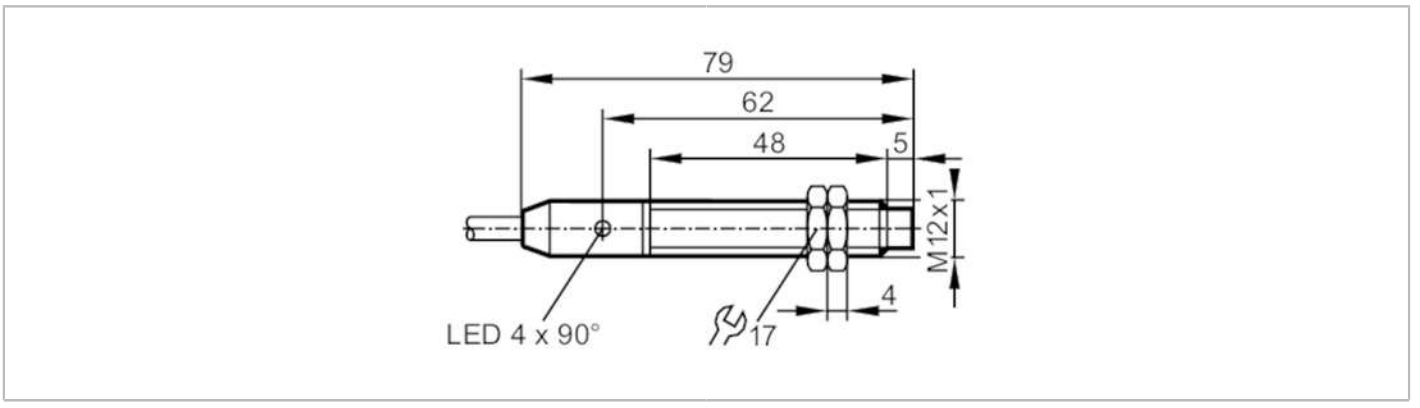

EC 1935/2004

Product characteristics		
Electrical design		PNP/NPN
Output function		normally open
Sensing range	[mm]	7
Housing		threaded type
Dimensions	[mm]	M12 x 1 / L = 79
Application		
Special feature		Increased sensing range; Optical setting aid
Application		regular cleaning processes
Electrical data		
Operating voltage	[V]	10...30 DC
Current consumption	[mA]	12; (24 V)
Protection class		II
Reverse polarity protection		yes
Outputs		
Electrical design		PNP/NPN
Output function		normally open
Max. voltage drop switching output DC	[V]	2.8
Minimum load current	[mA]	2; (only in 2-wire operation)
Max. leakage current	[mA]	0.5; (only in 2-wire operation)
Permanent current rating of switching output DC	[mA]	100
Switching frequency DC	[Hz]	700
Short-circuit protection		yes
Type of short-circuit protection		pulsed
Overload protection		yes
Detection zone		
Sensing range	[mm]	7
Real sensing range Sr	[mm]	7 ± 10 %
Operating distance	[mm]	0...5.7

IFT241

Inductive sensor

IFKC007-ASKG/M/V4A/0,9M/PH/AS

Increased sensing range			yes
Accuracy / deviations			
Correction factor			steel: 1 / stainless steel: 0.7 / brass: 0.4 / aluminium: 0.4 / copper: 0.3
Hysteresis	[% of Sr]		3...15
Switch point drift	[% of Sr]		-10...10
Operating conditions			
Ambient temperature	[°C]		0...100
Protection			IP 68; IP 69K; ("COP")
Tests / approvals			
EMC		EN 61000-4-2 ESD	4 kV CD / 8 kV AD
		EN 61000-4-3 HF radiated	10 V/m
		EN 61000-4-4 Burst	2 kV
		EN 61000-4-5 Surge	0,5 kV line to line, Ri: 2 Ohm
		EN 61000-4-6 HF conducted	10 V
		EN 55011	class B
MTTF	[years]		1287
Mechanical data			
Weight	[g]		86
Housing			threaded type
Mounting			non-flush mountable
Dimensions	[mm]		M12 x 1 / L = 79
Thread designation			M12 x 1
Materials			housing: stainless steel (1.4404 / 316L); sensing face: PEEK
Displays / operating elements			
Display		switching status	4 x 90° LED, yellow
		setting aid	1 x LED, red
Optical setting aid			yes
Accessories			
Items supplied			lock nuts: 2
Remarks			
Pack quantity			1 pcs.
Electrical connection - plug			

Cable: 0.9 m, PUR, Ø 4.9 mm; 3 x 0.34 mm²

Connector: 1 x M8; coding: A



IFT241

Inductive sensor

IFKC007-ASKG/M/V4A/0,9M/PH/AS

Connection

