JUMO GmbH & Co. KG
Delivery address: Mackenrodtstraße 14,
36039 Fulda, Germany
Postal address: 36035 Fulda, Germany
Phone: +49 661 6003-0
Fax: +49 661 6003-607
E-mail: mail@jumo.net
Internet: www.jumo.net

JUMO Instrument Co. Ltd.
JUMO House
Temple Bank, Riverway
Harlow - Essex CM20 2DY, UK
Phone: +44 1279 63 55 33
Fax: +44 1279 63 52 62
E-mail: sales@jumo.co.uk
Internet: www.jumo.co.uk

JUMO Process Control, Inc.
8 Technology Boulevard
Canastota, NY 13032, USA
Phone: 315-697-JUMO
1-800-554-JUMO
Fax: 315-697-5867
E-mail: info@jumo.us
Internet: www.jumo.us

RTD surface temperature probes



- **Temperature range from -50 to +260°C**
- **With probes made of various materials**
- **For round and level surfaces**
- **Easy and quick installation**
- **Low thermal mass**

RTD surface temperature probes are used for measuring temperatures on closed pipework and/or other round or level surfaces. Versions 902522/10 and 902522/11 can be attached to any surface, for example a heating platen, via their mounting holes. The remaining versions avoid the necessity for mechanical modification of the measurement location due to their easy installation via cable ties or hose clamps.

An advantage to the indirect method of temperature measurement is that disruption of the flow stream is avoided. Additionally, the life of the RTD is not shortened by the effects of either pressure or chemicals.

The low thermal mass of the sensor means that there is very little influence of the sensor on the measured object. Thermal conductance paste is available to improve heat transfer. Large differences in temperature between the measured medium and the surrounding ambient air will influence the measurement; in such cases, we recommend additional insulation around the sensor.

The measurement insert is normally fitted with a Pt 100 temperature sensor as per DIN EN 60751, Class B in 2-wire circuit; versions with Pt 500 or Pt 1000 can also be supplied.

Technical Data

Connection	Various cable termination types are available: tin-plated, with ferrules, contacts or multi-pole connectors
Cable	Silicone, ambient temperature -50 to +180°C PTFE, ambient temperature -190 to +260°C Kapton, ambient temperature -50 to +260 °C
Thermowell	Stainless steel 1.4571 (equivalent to SS316 Ti), aluminum, plastic
Measuring insert	Pt 100 temperature sensor, DIN EN 60 751, Class B, two-wire circuit

JUMO GmbH & Co. KG
Delivery address: Mackenrodtstraße 14,
36039 Fulda, Germany
Postal address: 36035 Fulda, Germany
Phone: +49 661 6003-0
Fax: +49 661 6003-607
E-mail: mail@jumo.net
Internet: www.jumo.net

JUMO Instrument Co. Ltd.
JUMO House
Temple Bank, Riverway
Harlow - Essex CM20 2DY, UK
Phone: +44 1279 63 55 33
Fax: +44 1279 63 52 62
E-mail: sales@jumo.co.uk
Internet: www.jumo.co.uk

JUMO Process Control, Inc.
8 Technology Boulevard
Canastota, NY 13032, USA
Phone: 315-697-JUMO
1-800-554-JUMO
Fax: 315-697-5867
E-mail: info@jumo.us
Internet: www.jumo.us

Dimensions

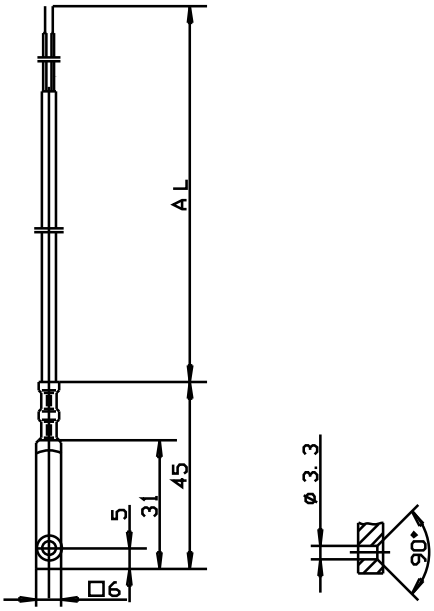

Basic type 902550/10

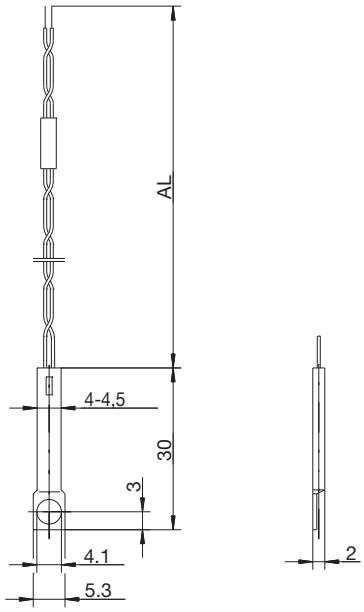

Basic type 902550/11

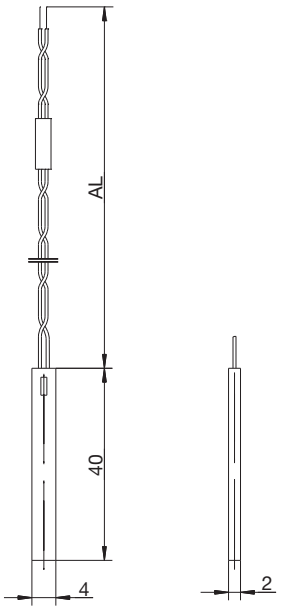

Basic type 902550/20

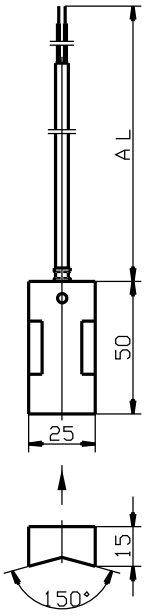

Basic type 902550/30

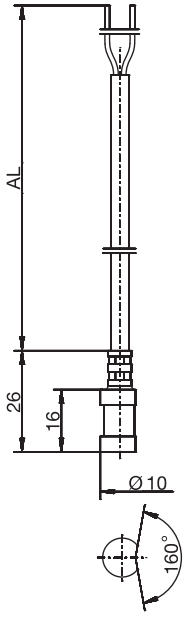

Basic type 902550/31

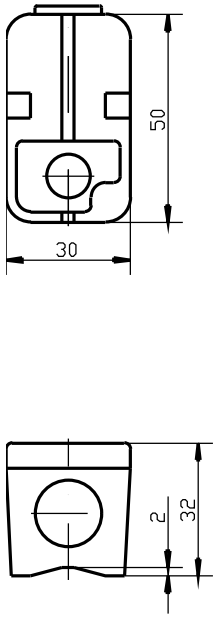

Basic type 902554/41
Basic type 902554/42

JUMO GmbH & Co. KG
Delivery address: Mackenrodtstraße 14, 36039 Fulda, Germany
Postal address: 36035 Fulda, Germany
Phone: +49 661 6003-0
Fax: +49 661 6003-607
E-mail: mail@jumo.net
Internet: www.jumo.net

JUMO Instrument Co. Ltd.
JUMO House
Temple Bank, Riverway
Harlow - Essex CM20 2DY, UK
Phone: +44 1279 63 55 33
Fax: +44 1279 63 52 62
E-mail: sales@jumo.co.uk
Internet: www.jumo.co.uk

JUMO Process Control, Inc.
8 Technology Boulevard
Canastota, NY 13032, USA
Phone: 315-697-JUMO
1-800-554-JUMO
Fax: 315-697-5867
E-mail: info@jumo.us
Internet: www.jumo.us

Order details: RTD surface temperature probes

						(1)	**Basic type**
					902550/10		RTD surface temperature probe with fastening holes protection fitting, aluminum
					902550/11		RTD surface temperature probe with fastening holes protection fitting, stainless steel
					902550/20		RTD surface temperature probe protection fitting, stainless steel
					902550/30		RTD surface temperature probe protection fitting, aluminum
					902550/31		RTD surface temperature probe protection fitting, aluminum
						(2)	**Operating temperature range in °C/cable type**
				x	730		-5 to +105°C/PVC
			x	x	378		-50 to +180°C/Silicone
x	x	x		x	386		-50 to +260°C/PTFE
				x	388		-50 to +260°C/stainless steel PTFE
						(3)	**Measuring insert**
x			x	x	1001		1x Pt 100 in 3-wire circuit
x			x	x	1002		1x Pt 500 in 3-wire circuit
x	x	x	x	x	1003		1x Pt 100 in 2-wire circuit
x	x	x	x	x	1004		1x Pt 500 in 2-wire circuit
x	x	x	x	x	1005		1x Pt 1000 in 2-wire circuit
x			x	x	1006		1x Pt 1000 in 3-wire circuit
						(4)	**Tolerance class as per DIN EN 60 751**
x	x	x	x	x	1		Class B (standard)
x	x	x	x	x	2		Class A
						(5)	**Cable termination**
x	x	x	x	x	04		tin-plated wires
x	x	x	x	x	11		Ferrules as per DIN 46 228 Part 4 (Standard)
x	x	x	x	x	13		Contact 6.3 as per DIN 46 247
						(6)	**Cable length AL in mm (500 ≤ AL ≤ 500000)**
x	x	x	x	x	2500		2500mm
x	x	x	x	x	...		Please specify in plain text (500mm steps)
						(7)	**Extra codes**
x	x	x	x	x	000		without extra codes
x			x	x	315		Strain relief spring
x			x	x	316		Strain relief heatshrink tube

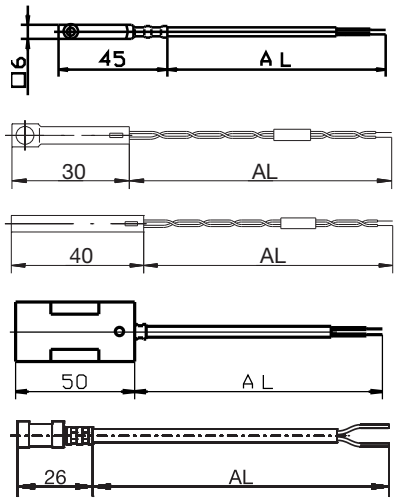

	(1)		(2)		(3)		(4)		(5)		(6)		(7)	
Order code		-		-		-		-		-		/		,...[1]
Order example	902550/10	-	386	-	1003	-	1	-	11	-	2500	/	000	

Accessories

	Part No.
Installation kit (clamping band and thermal conductance paste) for pipes up to a max. diameter of 100 mm	90/00493675

[1] List extra codes in sequence, separated by commas.

JUMO GmbH & Co. KG
Delivery address: Mackenrodtstraße 14,
36039 Fulda, Germany
Postal address: 36035 Fulda, Germany
Phone: +49 661 6003-0
Fax: +49 661 6003-607
E-mail: mail@jumo.net
Internet: www.jumo.net

JUMO Instrument Co. Ltd.
JUMO House
Temple Bank, Riverway
Harlow - Essex CM20 2DY, UK
Phone: +44 1279 63 55 33
Fax: +44 1279 63 52 62
E-mail: sales@jumo.co.uk
Internet: www.jumo.co.uk

JUMO Process Control, Inc.
8 Technology Boulevard
Canastota, NY 13032, USA
Phone: 315-697-JUMO
1-800-554-JUMO
Fax: 315-697-5867
E-mail: info@jumo.us
Internet: www.jumo.us

Order details: RTD surface temperature probes

			(1) Basic type
		902554/41	RTD surface temperature probe for cylindrical surfaces (pipes) incl. installation kit
		902554/42	RTD surface temperature probe for flat surfaces
			(2) Operating temperature in °C
x	x	365	-50 to +120°C
			(3) Measuring insert
x	x	1003	1x Pt 100 in 2-wire circuit
x	x	1004	1x Pt 500 in 2-wire circuit
x	x	1005	1x Pt 1000 in 2-wire circuit
x	x	1009	1x Ni 1000 in 2-wire-circuit
x	x	1621	1x KTY81-122 in 2-wire circuit
			(4) Tolerance class per DIN EN 60 751
x	x	0	Tolerance with KTY sensor
x		1	Class B (standard)
x		2	Class A
			(5) Extra codes
x	x	000	without extra codes
x	x	404	Protection class IP65 (cable screw-connection M 16x1.5)

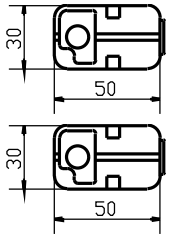

	(1)		(2)		(3)		(4)		(5)
Order code		-		-		-		/	
Order example	902554/41	-	365	-	1003	-	1	/	000

Stock versions

(1)		(2)		(3)		(4)		(5)		(6)		(7)	Part No.
902550/10	-	386	-	1003	-	1	-	11	-	2500	/	000	90/00306774
902550/11	-	386	-	1003	-	1	-	11	-	2500	/	000	90/00065548
902550/20	-	386	-	1003	-	1	-	11	-	2500	/	000	90/00065547
902550/30	-	378	-	1003	-	1	-	11	-	2500	/	315	90/00065531
902550/31	-	730	-	1003	-	1	-	11	-	2500	/	000	90/00506998
902550/31	-	378	-	1003	-	1	-	11	-	2500	/	000	90/00507000
902550/31	-	378	-	1005	-	1	-	11	-	2500	/	000	90/00507006

(1)		(2)		(3)		(4)		(5)	Part No.
902554/41	-	365	-	1003	-	1	/	000	90/00378669
902554/41	-	365	-	1003	-	1	/	404	90/00376703