Brand of NTN corporation

Technical data

2211.KC3

Double-row self-aligning ball bearings



Self-aligning ball bearing, pressed steel cage, tapered bore, open

VISUAL (S)

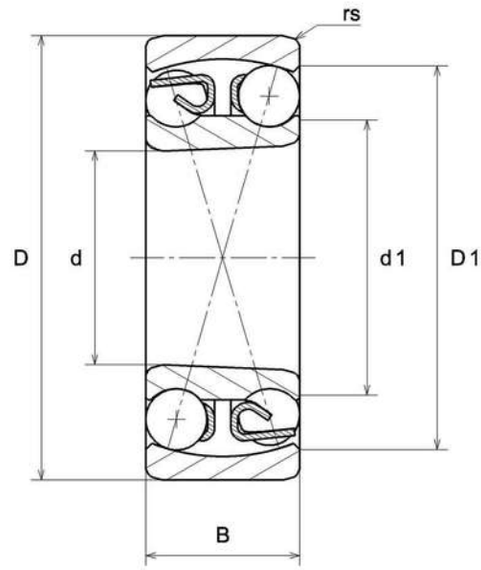

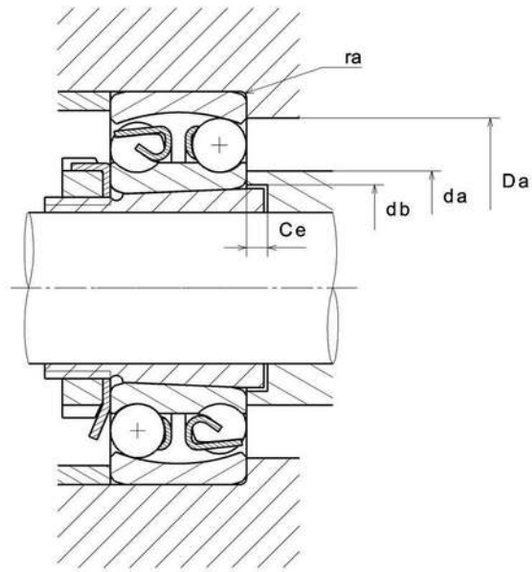

NTN Europe
1 rue des Usines · BP 2017 · 74010 Annecy Cedex · France · Tel. +33 (0)4 50 65 30 00
S.A. au capital de 322 639 919 € · RCS ANNECY B 325 821 072 · Id. Fiscale : FR 48 325 821 072
SIRET 325 821 072 00015 · Code APE 2815 Z · Code NACE 28.15

2211.KC3
Double-row self-aligning ball bearings

PRODUCT DEFINITION	
Brand	SNR
d - Internal diameter	55 mm
D - External diameter	100 mm
B - Bearing/Inner ring width	25 mm
d1 - External diameter inner ring	69,9 mm
D1 - Inner diameter outer ring	85,2 mm
rs - Min fillet radius	1,5 mm
Associated sleeve reference	H311
Radial clearance class	C3
Precision class	P0
Mass	0,802 kg

PRODUCT PERFORMANCE	
C - Dynamic load	26300000 mN
C0 - Static load	9900000 mN
Cu - Fatigue limit load	450000 mN
e - Coefficient	0.28
Y0 - Static axial load coefficient	2.37
Y1 - Lower axial load coefficient	2.26
Y2 - Upper axial load coefficient	3.5
N ref - Reference thermal speed	41400 °/s
N lim - Mechanical Limit Speed	50400 °/s
Tmin - Min operating temperature	233,15 °K
Tmax - Max operating temperature	393,15 °K

2211.KC3
Double-row self-aligning ball bearings

BEARING FREQUENCIES	
BPFO - Over rolling frequency on outer ring (60 rpm)	8.252 Hz
BPFI - Over rolling frequency on inner (60 rpm)	10.748 Hz
BSF - Over rolling frequency on rolling element (60 rpm)	7.352 Hz
BRF - Rotational frequency – rolling element (60 rpm)	3.676 Hz
FTF - Rotational frequency - cage (60 rpm)	0.434 Hz

ABUTMENT	
da min - Min shoulder diameter IR	63 mm
da max - Max shoulder diameter IR	68 mm
db - Min diameter for Sleeve	60 mm
Ce - Min length fro Sleeve	10 mm
Da max - Max shoulder diameter OR	92 mm
ra max - Max shaft & housing fillet radius	1,5 mm