Technical datasheet



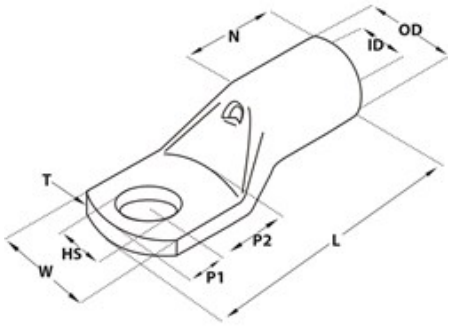

35-12

E0845060

CABLE LUG KRF 35mm2, M12

Product Properties:

Suitable for Class 5 conductor	Yes
Suitable for Class 6 conductor	Yes
Insulated	No
Max. current (Imax)	153 A
Number of mounting holes	1 .
Flange shape	Ring shape
Colour insulation	Other
Slender flange model	No
With sight-hole	Yes
Conductor category	Several
Max Temp	150 °C
Surface protection	Tinned
Material	Copper
Connecting angle	180° (horizontal)
Series	KRF/KSF (10-500mm2)

Dimensions:

HS	13 mm
ID	9 mm
OD	13 mm
T	3.5 mm
L	51 mm

N	14 mm
W	22 mm
MOQ	50 .
Unit	pcs
Bolt dimension (metric)	12 .
Nominal cross section	35 mm²

Approvals:

Approved according to CE	Yes
Approved according to DNV	Yes

Compliance:

Conflict Minerals	Yes, see report under tab "Documents"
Extended Minerals	N/A, contains no extended minerals
Iron and Steel Sanction	Contain no Iron or Steel
PFAS	No PFAS
REACH	No SVHC (Latest. 21 Jan 2025)
RoHS	RoHS 3 (2015/863)
SCIP	Not Applicable
ECCN (EU)	No CLASS
ECCN (US)	EAR99

Other information:

ETIM-Class	EC001051 - Tube cable lug for copper conductors
ETIM-Release	9.0
Trademark	NEMIQ
Product Group	Cable lugs
Search Description	EFO2024V
Alternative SKU	35-12
E-no	E0845060

Logistic information:

Barcode	733117612066
Country of origin	CN
E-no	E0845060
Item status	Stock item, normally in stock with reservation for in between sales.
MOQ	50 .
Stock code	35-12
Taric code	85369010
Unit	pcs

*We reserve the right to make technical changes and disclaim any typographical errors.