E30459

Gasket

PEEK SEAL

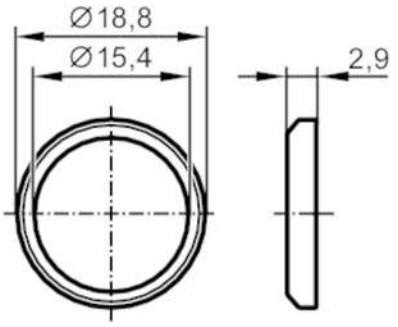

ACS EC 1935/2004 EHEDG Certified FCM FDA Reg31

Application		
Design		for G1/2 thread connection with sealing cone
Mechanical data		
Weight	[g]	5.4
Inside diameter	[mm]	15.4
External diameter	[mm]	18.8
Materials		PEEK, FDA compliant
Remarks		
Pack quantity		1 pcs.