SG2EDGK10M3R

Surge protection device type 1,2 for photovoltaic applications with plug-in cartridge, short-circuit current Iscpv 11KA, +, -, PE. With remote contact



Product designation			Surge Protection Device (SPD)
Product type designation			SG2E
Operating voltage type			DC
Application			DC Power lines
Number of DIN modules			3
Relay output			Yes
SPD according to EN50539-11			Yes
Electrical features			
Rated operational voltage DC		VDC	1100
Maximum continuous voltage Ucpv		V	1100
IEC Maximum discharge current Imax 8/20 (L-N/N-PE)		kA	40
IEC Rated discharge current (IEC) In 8/20 (L-N/N-PE)		kA	20
IEC Voltage protection level Up (L-N/N-PE)		kV	<3.8
Tripping time ta (L-N/N-PE)		ns	<25
Thermal insulation protection			YES
Backup protection fuse (IEC) with Isc >100A		Class/A	Not needed
Maximum short circuit current Iscpv		kA	11
Status indicator - operating / end of life			Frontal indication/Aux contact
Ambient conditions			
Operating temperature			
	min	°C	-40
	max	°C	+85
Max altitude		m	2000
Mechanical features			
Fixing			Din rail
Conductor section Flexible max (IEC)		mm²	25
Conductor section Rigid max (IEC)		mm²	35
Weight		g	454
Relay output for remote status indication			
Type of contact			CO
Rated current at			
	250V AC	A	1
	12V DC	A	0.5
	24V DC	A	0.5
Dimensions			

The characteristics described in this document are subject to updates or modifications at any time. The descriptions, technical and functional information, illustrations and instructions in this brochure are purely illustrative, and are consequently not contractually binding

SG2EDGK10M3R

Surge protection device type 1,2 for photovoltaic applications with plug-in cartridge, short-circuit current Iscpv 11KA, +, -, PE. With remote contact

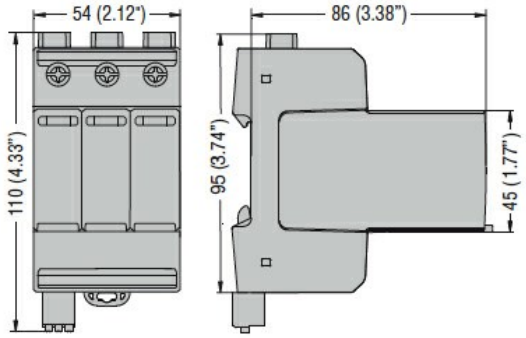

Wiring diagrams

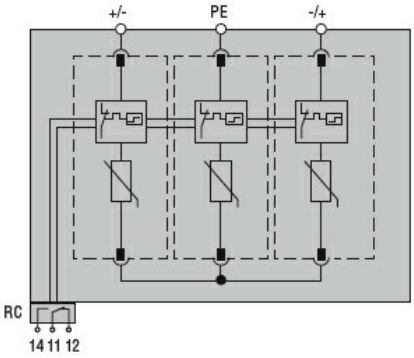

Certifications and compliance

Compliance

IEC/EN/BS 50539-11

Certificates

EAC

ETIM classification

ETIM 8.0

EC000941 - Surge protection device for power supply systems

The characteristics described in this document are subject to updates or modifications at any time. The descriptions, technical and functional information, illustrations and instructions in this brochure are purely illustrative, and are consequently not contractually binding