LED system light



Product-Nr.	155220-02
EAN:	4260556627632
Model:	SYSTEMLED EVO - ECO Neutral White

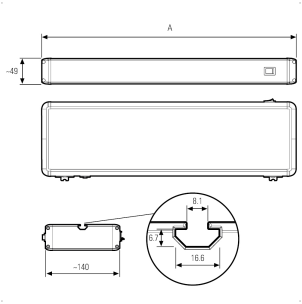

Order number:	155220-02
Model:	SYSTEMLED EVO - ECO Neutral White
Type:	LED system light
Illuminant:	LE-215e, LE-860e4000K
Total output incl. driver:	~32 W
Power consumption:	~28,75 W
Lamp luminous flux:	4975 lm
Lamp luminous efficiency:	173 lm/W
Light distribution:	direct
Light colour:	4000K 3-step MacAdam
R9:	90
Connected load:	120-277VAC, 50 - 60 Hz
Power supply:	integrated
Connection (connector):	Wieland GST18
Degree of protection:	IP40
Class of protection:	I
Glare control:	Microprisms
Beam angle (optics):	90°
Operating temperature:	-10 °C - +50 °C (14 °F - 122 °F)
Storage temperature:	-20 °C - +80 °C (-4 °F - 176 °F)
Colour rendering (Ra):	>90 (typ. 95)
Lamps lifetime:	> 100,000 h (L80/B10)
Housing material:	aluminum and PMMA
Height [B] x Width [C]:	48 mm x 139 mm (~1,89“ x ~5,47“)
Length [A]:	1120 mm (~44,09“)
Mounting:	T-slot rear (8 mm)
Weight (net):	3100 g (~109 oz)
Gross weight:	3960 g (~140 oz)
Risk group (DIN EN 62471):	free group
Dimmable:	yes
Mounting accessories:	optional
Made in:	Germany

LED2WORK GmbH | Stuttgarter Straße 13 A | 75179 Pforzheim | Germany
T: +49 7231 44920-00 | info@led2work.com | www.led2work.com |
Shop.led2work.com