E12513

Connecting cable with plug

ASTGN040ZDS0020L04

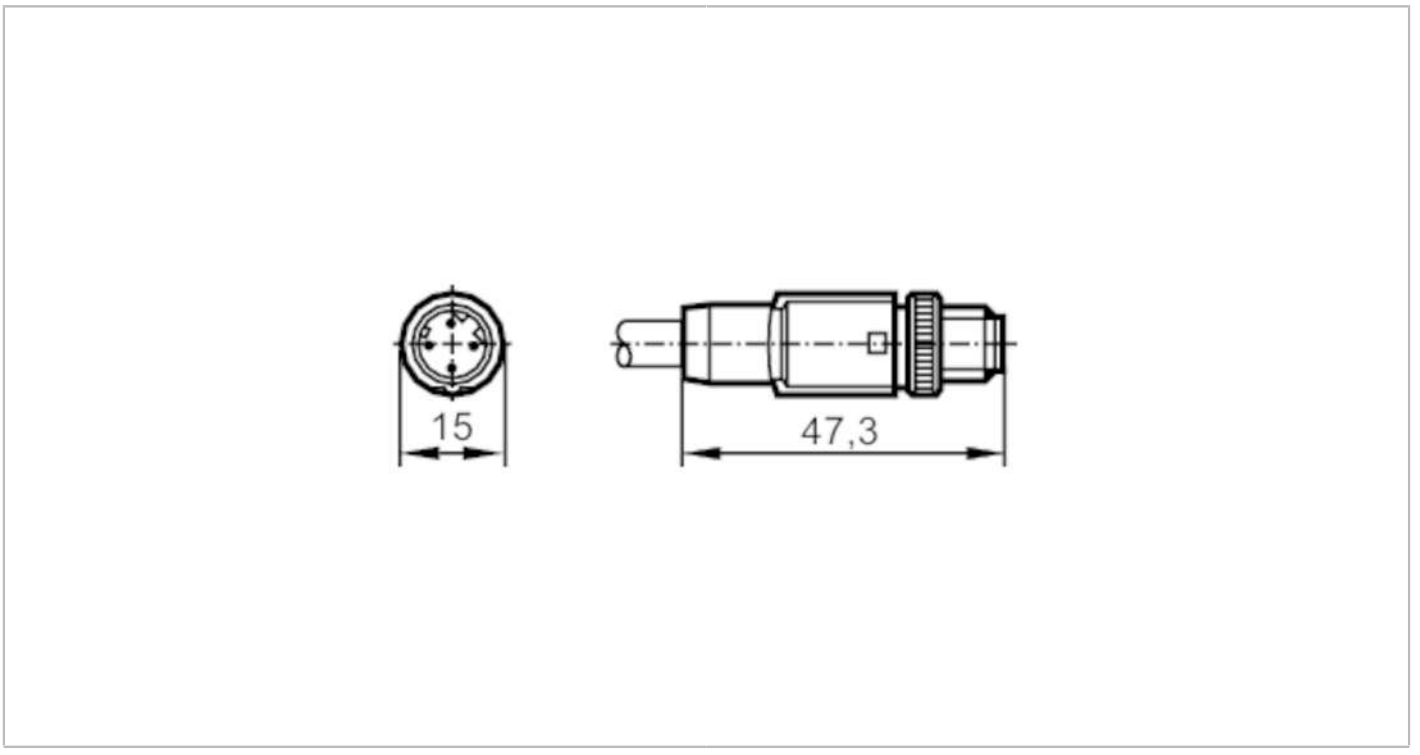

CE

Application		
Special feature		Gold-plated contacts
Design		Ethernet cable, D-coded
Electrical data		
Operating voltage	[V]	< 250 AC/DC
Max. current load total	[A]	4
Operating conditions		
Ambient temperature	[°C]	-40...70
Protection		IP 67
Mechanical data		
Weight	[g]	1380.5
Dimensions	[mm]	15 x 15 x 47.3
Materials		TPU
Moulded-body material		TPU
Material nut		diecast zinc, nickel-plated
Remarks		
Pack quantity		1 pcs.

E12513

Connecting cable with plug

ASTGN040ZDS0020L04

Electrical connection

Cable: 20 m, PVC, green, Ø 6.5 mm; 4 x 0.34 mm²

Electrical connection - plug

Connector: 1 x M12, straight; coding: D; Moulded body: TPU; Locking: diecast zinc, nickel-plated; Contacts: gold-plated; Shielded connection cable: screen connected



Connection

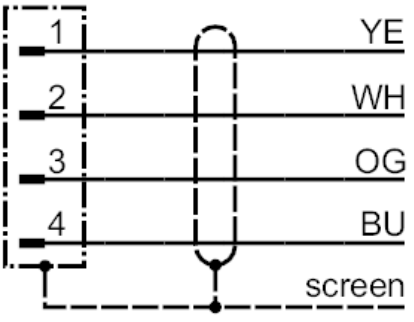

	Core colours :
BU =	blue
OG =	orange
WH =	white
YE =	yellow