Light control

Time relay, electronic, DIN rail



telt 100

Description

telt 100

- Time relay for automatic testing of emergency lighting
- Panel button for starting the test
- Comfortable and well-arranged time delay (t) setting by rotary switch
- Adjustable time delay 10 m – 30 m – 60 m – 90 m – 120 m – 180 m is divided into six ranges
- ZERO CROSS feature: closes and opens the output contact when the voltage
- crosses zero
- Multifunction red LED fl ashes or shines depending on the operating states

Functional description

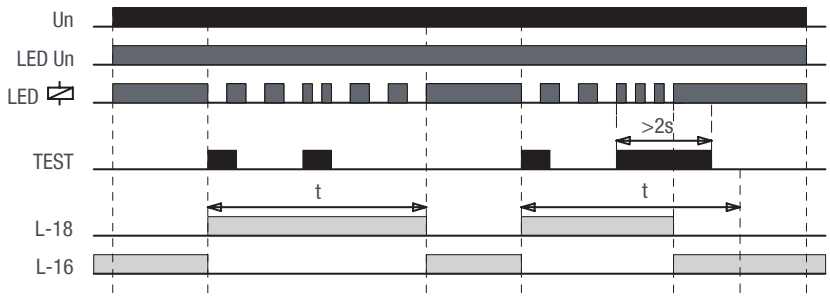

If the supply voltage is connected, the green LED Un lights up and at the same time the red LED indicates that the idle output contact „16“ is closed. Pressing the TEST button on the device panel closes the output contact „18“ and disconnects the phase wire „L“ from the tested emergency lights.

After the set time delay (t) has elapsed, output contact „18“ opens and emergency lighting is connected through contact „16“. During the delay, the red LED fl ashes slowly.

Repeated short pressing of the TEST button does not aff ect the length of the delay. A long press of the TEST button (>2 s) ends the delay. While pressing the button, the red LED fl ashes quickly.

Product selection

Frequency	Operating voltage	Type	Article no.
50/60 Hz	230 V AC	telt 100	40.02.0001.1

Technical data

	telt 100
Operating voltage	230 V AC
Frequency	50/60 Hz
Power consumption (max)	3.9 VA/1.9 W
Switching capacity	4000 VA/AC1, 384 W/DC1
Switching capacity	250 V AC/24 V DC
Maximum current	80 A/20 ms (switching contact)
Time setting	Rotary switch

	telt 100
Time deviation:	5 % – mechanical setting
Repeat accuracy:	0.2 % – set value stability
Protection degree:	IP40 front panel / IP20 terminals
Operating temperature:	–20 °C … +40 °C

Connection

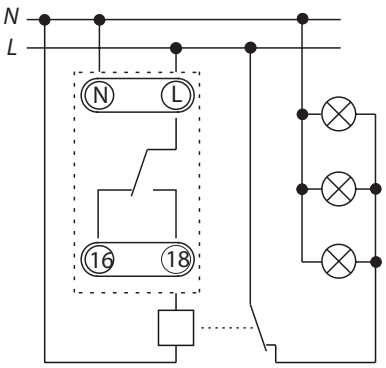

Emergency lighting connection through contactor (for I>16A)

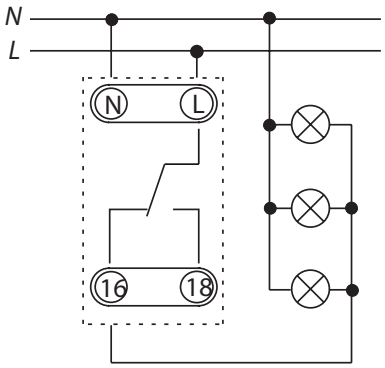

Direct emergency lighting connection (for I<16A)