Current Transducer HX 03..50-P/SP2

I_{PN} = 3 .. 50 A

For the electronic measurement of currents: DC, AC, pulsed, mixed, with a galvanic isolation between the primary circuit (high power) and the secondary circuit (electronic circuit).



Electrical data

Primary nominal current rms I_{PN} (A)	Primary current, measuring range[1] I_{PM} (A)	Primary conductor diameter x turns (mm)	Type	RoHS since date code
3	± 9	0.6d x 20T	**HX 03-P/SP2**	46128
5	± 15	0.8d x 12T	**HX 05-P/SP2**	46019
10	± 30	1.1d x 6T	**HX 10-P/SP2**	45352
15	± 45	1.4d x 4T	**HX 15-P/SP2**	46133
20	± 60	1.6d x 3T	**HX 20-P/SP2**	planned
25	± 75	1.6d x 2T	**HX 25-P/SP2**	46233
50	± 150	1.2 x 6.3 x 1T	**HX 50-P/SP2**	46152

V_{OUT}	Output voltage (Analog) @ ± I_{PN}, R_L = 2 kΩ, T_A = 25°C	V_{OE} ± 0.625	V
R_{OUT}	Output internal resistance	< 50	Ω
R_L	Load resistance	≥ 2	kΩ
V_C	Supply voltage (± 5 %)	+ 12 .. 15	V
I_C	Current consumption	< 15	mA
V_d	Rms voltage for AC isolation test, 50 Hz, 1 min	> 3	kV
V_e	Partial discharge extinction voltage rms @ 10 pC	≥ 1	kV
$\hat{V}_W$	Impulse withstand voltage, 1.2/50 µs	≥ 6	kV

Accuracy-Dynamic performance data

X	Accuracy @ I_{PN}, T_A = 25°C (excluding offset)	< ± 1	% of I_{PN}
ε_L	Linearity error (0 .. ± I_{PN})	< ± 1	% of I_{PN}
V_{OE}	Electrical offset voltage @ T_A = 25°C	+ 2.5V ± 50	mV
V_{OH}	Hysteresis offset voltage @ I_P = 0; after an excursion of 1 x I_{PN}	< ± 10	mV
TCV_{OE}	Temperature coefficient of V_{OE}	< ± 1.5	mV/K
TCV_{OUT}	Temperature coefficient of V_{OUT} (% of reading)	± 0.1	%/K
t_r	Response time to 90% of I_{PN} step	≤ 3	µs
BW	Frequency bandwidth (- 3 dB) [2]	50	kHz

General data

T_A	Ambient operating temperature	- 25 .. + 85	°C
T_S	Ambient storage temperature	- 25 .. + 85	°C
m	Mass	8	g
dCp	Creepage distance	≥ 5.5	mm
	Isolation material group	I	
	Standards	EN50178: 1997	

Notes : [1] With R_L=2kΩ
[2] Small signal only to avoid excessive heating of the magnetic core

Features

- Galvanic isolation between primary and secondary circuit
- Hall effect measuring principle
- Isolation voltage 3000V
- Low power consumption
- Extended measuring range(3x I_{PN})
- Isolated plastic case recognized according to UL94-V0.

Special feature

- Single supply from +12V to +15V

Advantages

- Low insertion losses
- Easy to mount with automatic handling system
- Small size and space saving
- Only one design for wide current ratings range
- High immunity to external interference.

Applications

- Switched Mode Power Supplies (SMPS)
- AC variable speed drives
- Uninterruptible Power Supplies (UPS)
- Electrical appliances
- Battery supplied applications
- DC motor drives

Application domain

- Industrial

LEM reserves the right to carry out modifications on its transducers, in order to improve them, without prior notice.

Dimensions HX 03..50-P/SP2 (in mm. 1 mm = 0.0394 inch)

HX 03..25-P/SP2

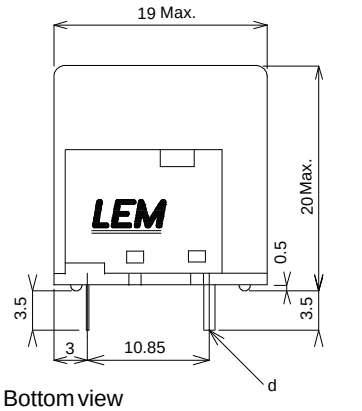

Bottom view

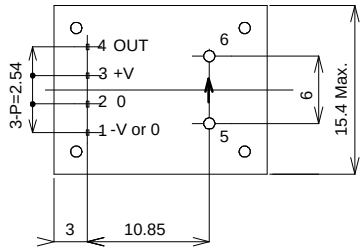

HX 50-P/SP2

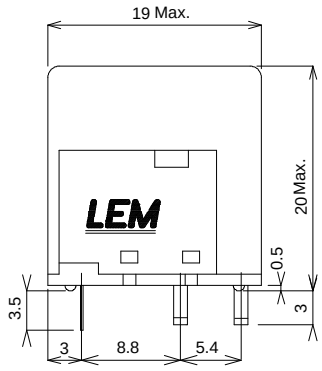

Bottom view

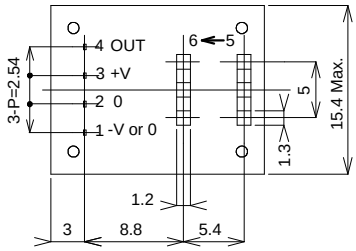

Top view

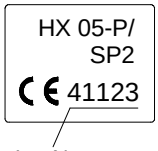

Lot No.

Terminal Pin Identification

1 ..... 0V
2 ..... 0V
3 ..... +12V to +15V
4 ..... Output
5 ..... Primary input Current (+)
6 ..... Primary input Current (-)

Primary conductor diameter

HX	03-P/ SP2	05-P/ SP2	10-P/ SP2	15-P/ SP2
d	0.6	0.8	1.1	1.4
HX	20-P/ SP2	25-P/ SP2	50-P/ SP2	
d	1.6	1.6	1.2 x 6.3	

Secondary pins dimension
0.5 x 0.25

Mechanical characteristics

- General tolerance ± 0.5 mm

Safety

This transducer must be used in electric/electronic equipment with respect to applicable standards and safety requirements in accordance with the following manufacturer's operating instructions.

Caution, risk of electrical shock

When operating the transducer, certain parts of the module can carry hazardous voltage (eg. primary busbar, power supply). Ignoring this warning can lead to injury and/or cause serious damage.
This transducer is a built-in device, whose conducting parts must be inaccessible after installation.
A protective housing or additional shield could be used.
Main supply must be able to be disconnected.

LEM reserves the right to carry out modifications on its transducers, in order to improve them, without prior notice.