stand alone readers





Metallic IP65 rated card and touch keypad readers

t: +44 (0)1202 723535 | e: sales@tdsi.co.uk | w: www.tdsi.co.uk

stand alone readers

SPECIFICATIONS

TDSi Part No.	2920-5000/2920-5001
Temperature range	-20°C to +50°C
Humidity range	5 - 95% non-condensing
Power	12 - 24V DC; 12 - 24 V AC
Current	80mA (standby); 110mA (working)
Read Range (cards)	Up to 50 mm
Operating Frequency	125kHz
Capacity	ZONE 1: 1000 passwords AND cards; ZONE 2: 10 passwords OR cards
Dimensions	123(H) x 79(W) x 21(D) mm

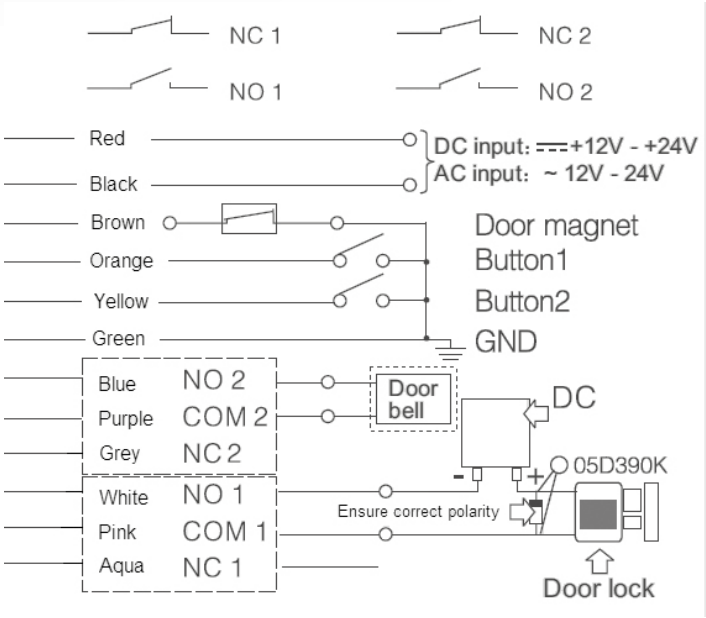

FEATURES & BENEFITS

5cm read range

Operates at 125kHz

Flexible Entry Method
Card access only
Code access only
Combined card + code access

Large Capacity
Capacity for 1000 passwords and card holders (ZONE 1) and up to 10 passwords or card holders (ZONE 2)

Compatible with TDSi's proximity cards and fobs

Built-in anti-tamper function

Watchdog Timer

Power reset

Self-recovery watchdog

Can connect to external unlock button

Dual relay outputs

Door opening

Door status detection (ZONE 1 only)

Open door by button

ORDERING INFORMATION

Part Number: 2920-5000
Description: Stand Alone Mullion

Part Number: 4262-0245
Description: TDSi Proximity Card

Part Number: 2920-5001
Description: Stand Alone Square

Part Number: 4262-0246
Description: TDSi Proximity Key fob

TDSi UK
Unit 10 Concept Park,
Innovation Close,
Poole,
Dorset BH12 4QT
United Kingdom
t: +44 (0)1202 723535
f: +44 (0)1202 724975
e: sales@tdsi.co.uk

TDSi France
Immeuble ATRIA,
2 rue du Centre
93160 NOISY LE GRAND,
France
t: +33 (0)1 58 84 20 90
f: +33 (0)1 58 84 20 91
e: infos@tdsi-france.com

TDSi China
Rm 103, 1 Bld,
Shangsha Innovation Science
& Technology Park,
9283 Binhai Road,
Futian District,
Shenzhen 518048,
P.R.China
t: 86-755-82535725,
82535720
f: 86-755-82535770
e: tdsiinfo@microgarde.com.cn

This datasheet is not intended to form any part of a contract. TDSi reserves the right to change the specification or appearance of any of its products.