Tilted Diamond+ M12 signal lamp, 24 Volt, bezel yellow, M12 4-pin A-coded



fields of application

- Measurement-control-regulation
- Electrical engineering
- Mechanical and system engineering
- Signalling systems
- Vehicle construction
- Industrial robots
- Model construction

special features

- Special refracted light effect due to diamond lens
- Diffuser lens designed by cult designer Luigi Colani
- Long-lasting and ultra-bright SMT LEDs
- Energy efficient: low electricity consumption
- Low-maintenance: particularly shock-resistant, no bulb replacement necessary
- Terminal with M12 plug or direct wiring with CAGE CLAMP®
- Accessory program: extension support tubes in different lengths
- Available colors: red, yellow, green, blue, transparent/white

description

RAFI has further refined the Tilted Diamond signal lamp, developed in collaboration with Luigi Colani. The result: Tilted Diamond+, which is also very easy to assemble, thanks to the M12 or CAGE CLAMP® terminal.

To achieve outstanding illumination, we have optimized the light refraction. Its uniform, all-round high visibility makes the signal lamp even easier to see from a distance, so you can respond even faster in an emergency. In line with everyday requirements in industrial environments, this signal lamp is especially sustainable and shock-resistant. In addition, the bright LEDs are energy efficient and do not have to be replaced. The resulting overall package, for many fields of application, will exceed your expectations.

technical data

general

Color	black
Bezel color	yellow
Property of bezel / mushroom	translucent
Bezel shape	convex
Collar shape	round
Operating temperature, min.	-30 °C
Operating temperature, max.	60 °C
Storage temperature, min.	-40 °C
Storage temperature, max.	85 °C

direct links

- RAFI eCatalog

The information in this data sheet only contains general descriptions and / or performance features, which may not apply precisely as described to the respective application, and which my change due to further product enhancements. The technical data, illustrations and other information about our products are the mere results of individual technical testing. These descriptions and other product features are only binding if they expressly agreed upon at the time of the conclusion of a binding contract. In all other cases, we reserve the right to make technical changes as well as changes of availability. Pictures and other graphic illustrations are approximations only. All product names may be trademarks or brand names of the RAFI Group or any other sub-supplier of RAFI. The use of such by any third parties for their own purposes may infringe the rights of the respective entity holding those rights.

RAFI GmbH & Co. KG

Ravensburger Str. 128-134
88276 Berg / Ravensburg
Germany
www.rafi-group.com,
info.headquarters@rafi-group.com

illuminated	Yes
Luminous elements	LED
Packaging	Box
Packaging unit	1 pcs.
net weight	61.2 g
Degree of protection, front side, according to DIN EN 60529	IP66 IP67
Degree of protection, rear side, according to DIN EN 60529	IP65
Impact resistance IK	08 side 08 frontal
MOQ order	10 pcs.
RoHS compliant	Yes
REACH compliant	Yes

mounting diameters

Outside dimension, length	56.8 mm
Outside dimension, width	56.8 mm
Outside dimension, height	84.6 mm
Mounting depth	14.5 mm
Installation height	70.1 mm
Collar dimension	56.8 mm

mechanical data

Fixing	Screw
Terminal on the rear	M12 4-pin A-coded
PIN 1	-
PIN 2	-
PIN 3	GND
PIN 4	LED +

electrical data

Operating voltage of the luminous element, min.	20 V
Operating voltage of the luminous element, max.	28 V
Voltage type	DC
Rated operating voltage	20-28 V
Power loss	2.24000 W

The information in this data sheet only contains general descriptions and / or performance features, which may not apply precisely as described to the respective application, and which my change due to further product enhancements. The technical data, illustrations and other information about our products are the mere results of individual technical testing. These descriptions and other product features are only binding if they expressly agreed upon at the time of the conclusion of a binding contract. In all other cases, we reserve the right to make technical changes as well as changes of availability. Pictures and other graphic illustrations are approximations only. All product names may be trademarks or brand names of the RAFI Group or any other sub-supplier of RAFI. The use of such by any third parties for their own purposes may infringe the rights of the respective entity holding those rights.

RAFI GmbH & Co. KG

Ravensburger Str. 128-134
88276 Berg / Ravensburg
Germany
www.rafi-group.com,
info.headquarters@rafi-group.com

drawings

Dimensioned drawing

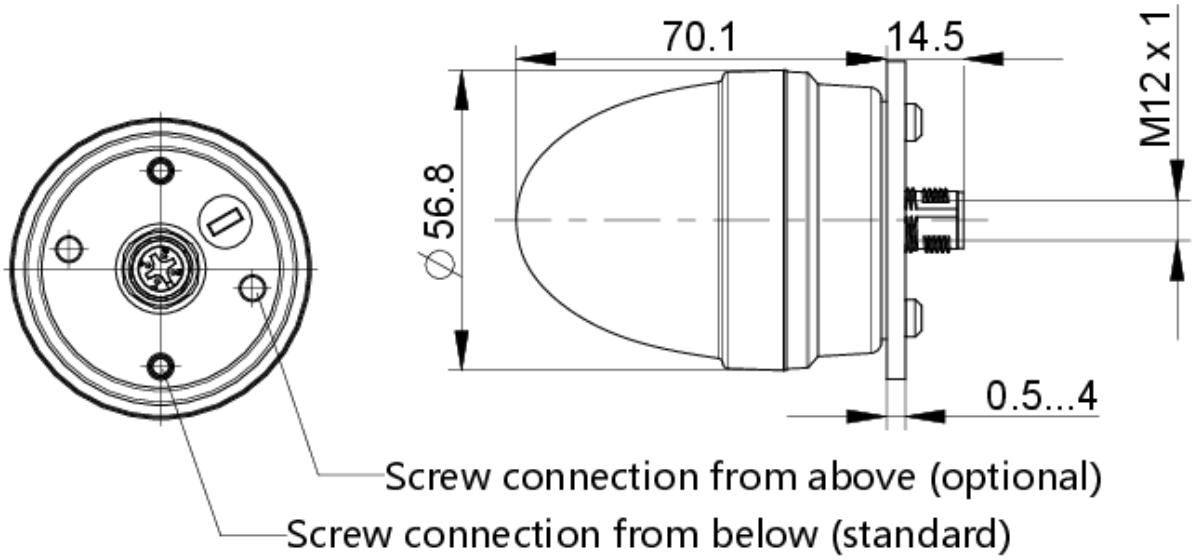

Schematic diagram

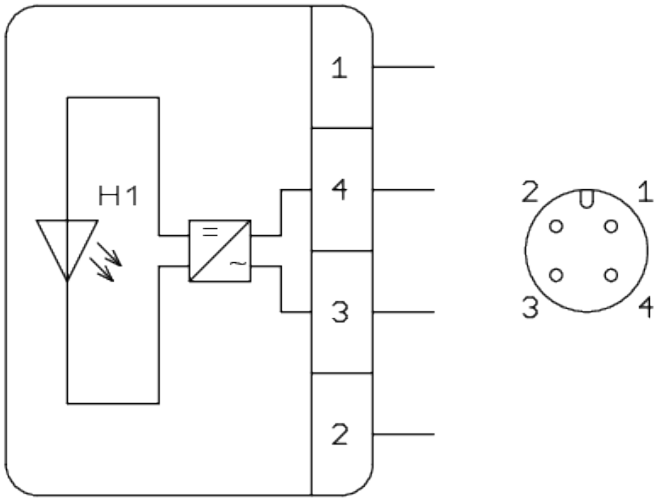

The information in this data sheet only contains general descriptions and / or performance features, which may not apply precisely as described to the respective application, and which my change due to further product enhancements. The technical data, illustrations and other information about our products are the mere results of individual technical testing. These descriptions and other product features are only binding if they expressly agreed upon at the time of the conclusion of a binding contract. In all other cases, we reserve the right to make technical changes as well as changes of availability. Pictures and other graphic illustrations are approximations only. All product names may be trademarks or brand names of the RAFI Group or any other sub-supplier of RAFI. The use of such by any third parties for their own purposes may infringe the rights of the respective entity holding those rights.

RAFI GmbH & Co. KG

Ravensburger Str. 128-134
88276 Berg / Ravensburg
Germany
www.rafi-group.com,
info.headquarters@rafi-group.com