DATASHEET - NZM1-XTVDV



Similar to illustration

Door coupling rotary handle, lockable on the handle, size 1

Part no.	**NZM1-XTVDV**
Catalog No.	**260172**
EL-Nummer (Norway)	**4315550**

Delivery program

Product range	Accessories
Accessories	Door coupling rotary handle
Standard/Approval	UL/CSA, IEC
Construction size	NZM1
Description	Door coupling rotary handle for operating the switch through a closed control panel door
Function	Standard, black/grey
Protection class	IP66 UL/CSA Type 4X, Type 12
Locking facility	lockable on the handle on the switch using up to 3 padlocks Modifiable on handle in I position as well With door interlock
Door interlock	Not defeated in the locked OFF and ON positions Can be modified in the unlocked ON position Can be modified such that it can be defeated from the outside using a screwdriver Door can be opened in OFF
Project planning information	External warning plate/designation label can be clipped on. Complete including rotary drive and coupling parts Extension shaft additionally required.
For use with	NZM1(-4), PN1(-4), N(S)1(-4)
lockable	double

Notes

Circuit-breaker can also be installed in a lying position 90 ° left/right, with the handle still in the same position.

Design verification as per IEC/EN 61439

IEC/EN 61439 design verification	
10.2 Strength of materials and parts	
10.2.2 Corrosion resistance	Meets the product standard's requirements.
10.2.3.1 Verification of thermal stability of enclosures	Meets the product standard's requirements.
10.2.3.2 Verification of resistance of insulating materials to normal heat	Meets the product standard's requirements.
10.2.3.3 Verification of resistance of insulating materials to abnormal heat and fire due to internal electric effects	Meets the product standard's requirements.
10.2.4 Resistance to ultra-violet (UV) radiation	Meets the product standard's requirements.
10.2.5 Lifting	Does not apply, since the entire switchgear needs to be evaluated.
10.2.6 Mechanical impact	Does not apply, since the entire switchgear needs to be evaluated.
10.2.7 Inscriptions	Meets the product standard's requirements.
10.3 Degree of protection of ASSEMBLIES	Does not apply, since the entire switchgear needs to be evaluated.
10.4 Clearances and creepage distances	Meets the product standard's requirements.
10.5 Protection against electric shock	Does not apply, since the entire switchgear needs to be evaluated.
10.6 Incorporation of switching devices and components	Does not apply, since the entire switchgear needs to be evaluated.
10.7 Internal electrical circuits and connections	Is the panel builder's responsibility.
10.8 Connections for external conductors	Is the panel builder's responsibility.
10.9 Insulation properties	
10.9.2 Power-frequency electric strength	Is the panel builder's responsibility.
10.9.3 Impulse withstand voltage	Is the panel builder's responsibility.
10.9.4 Testing of enclosures made of insulating material	Is the panel builder's responsibility.
10.10 Temperature rise	The panel builder is responsible for the temperature rise calculation. Eaton will provide heat dissipation data for the devices.
10.11 Short-circuit rating	Is the panel builder's responsibility. The specifications for the switchgear must be observed.

10.12 Electromagnetic compatibility		Is the panel builder's responsibility. The specifications for the switchgear must be observed.
10.13 Mechanical function		The device meets the requirements, provided the information in the instruction leaflet (IL) is observed.

Technical data ETIM 7.0

Low-voltage industrial components (EG000017) / Handle for power circuit breaker (EC000229)		
Electric engineering, automation, process control engineering / Low-voltage switch technology / Circuit breaker (LV < 1 kV) / Handle for switch devices (ecl@ss10.0.1-27-37-04-14 [AKF012014])		
Lockable		Yes
Colour		Black
Suitable for emergency stop		No
With extension shaft		No
Suitable for power circuit breaker		Yes
Suitable for switch disconnector		Yes

Approvals

Product Standards		UL489; CSA-C22.2 No. 5-09; IEC60947, CE marking
UL File No.		E140305
UL Category Control No.		DIHS
CSA File No.		022086
CSA Class No.		1437-01
North America Certification		UL listed, CSA certified
Degree of Protection		IEC: IP66, UL/CSA Type 4X, 12

Dimensions

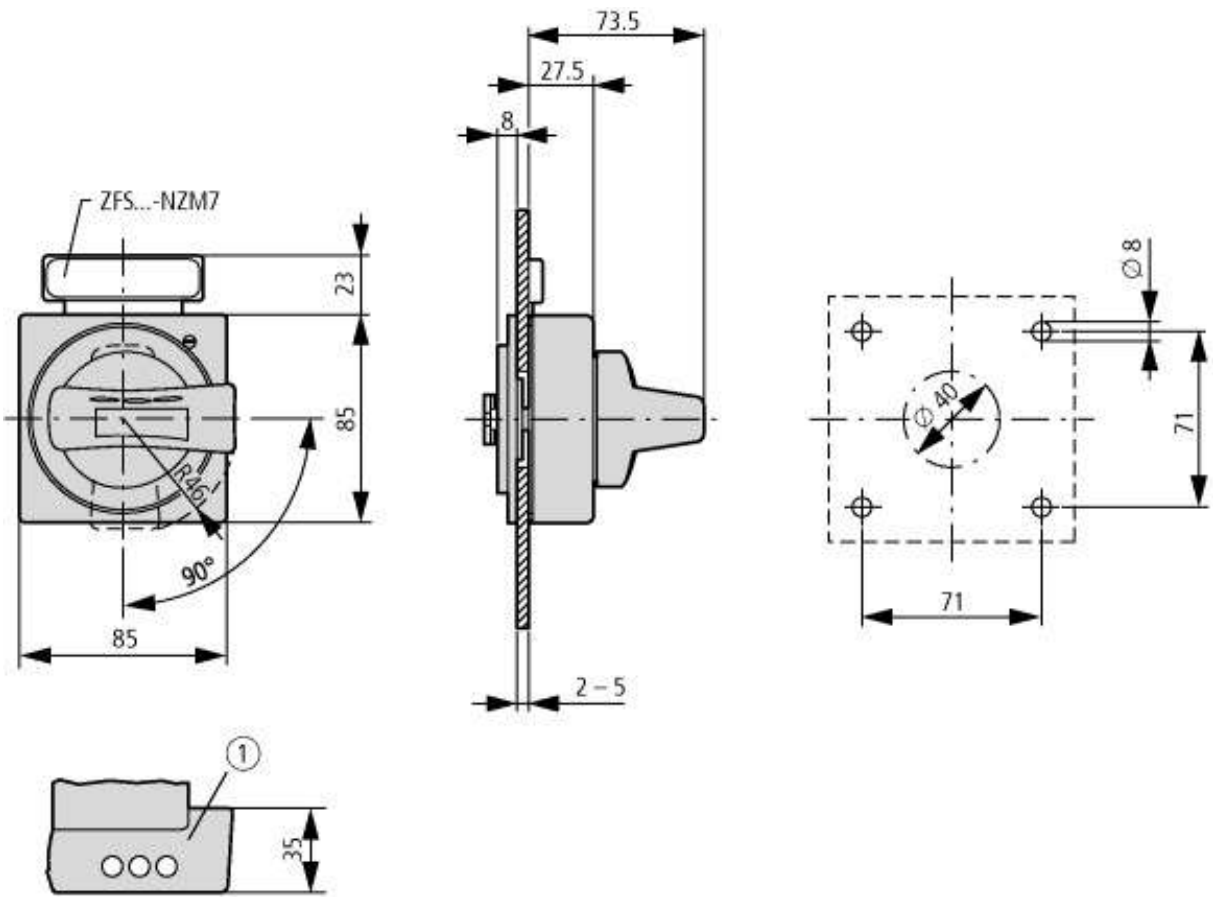

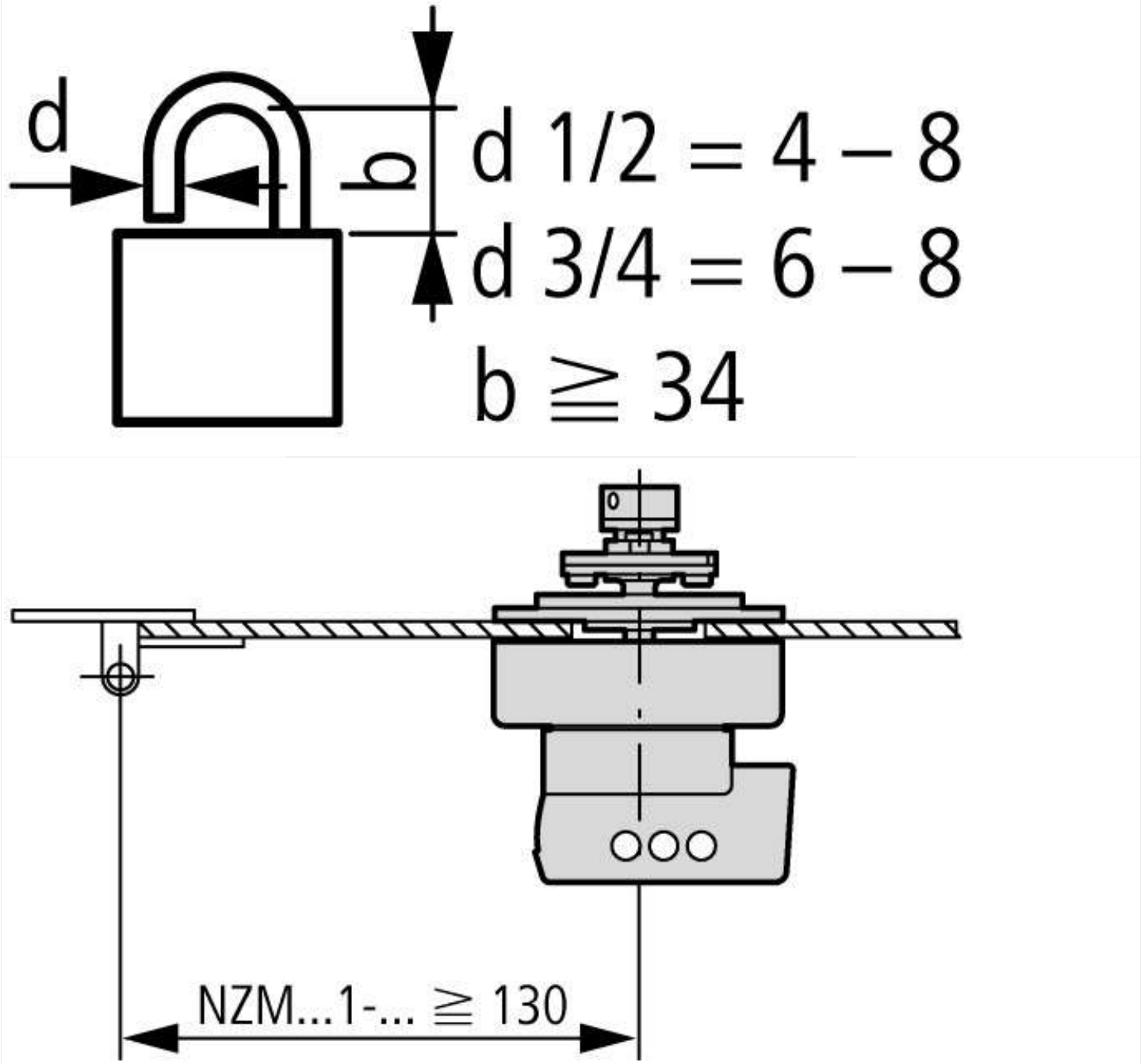

Minimum door coupling rotary handle clearance from door pivot point

© 02/2021 by Eaton Industries GmbH