

# Semiconductor Heater HG 040 Series

- *Dynamic heating up*
- *Temperature limiting*
- *Energy saving*
- *Self-regulating (PTC)*
- *Clip fixing*
- *Compact*

Compact heater for avoiding malfunctions caused by condensation and for use in enclosures where the temperature may not fall below a minimum value. The aluminium profile heater body has a chimney effect and helps to distribute heat evenly.

## Technical Data

| | |
|---|---|
| **Operating voltage:** | **AC/DC 110-250V max. 265V**[1)] |
| | other voltages on request (e.g. AC/DC 48V) |
| Heating element: | PTC resistor, self regulating and temperature limiting |
| Heater body: | extruded aluminium profile, anodised |
| Connection: | 2 x 0,75mm² x 500mm silicone cable |
| Mounting: | clip for 35mm DIN rail, EN 50022 |
| Fitting position: | preferably vertical |
| Operating / Storage temp.: | -40 to +70°C |
| Prot. type / Prot. class: | IP44 / II (double insulated) |
| Approvals: | VDE |
| Accessories: | screw fixing, art. no. 09024.0-00 |

[1)]Operating with voltages below AC 140V reduces heating performance by approx. 10%.

| | Art. No. | Heating capacity[2)] | Inrush current max. | Length (L) | Weight (approx.) |
|---|---|---|---|---|---|
| RS 159-2049 | 04000.0-00 | 15W | 1.5A | 65mm | 0.3kg |
| RS 224-492 | 04001.0-00 | 30W | 3.0A | 65mm | 0.3kg |
| RS 224-509 | 04003.0-00 | 45W | 3.5A | 65mm | 0.3kg |
| | 04005.0-00 | 60W | 2.5A | 140mm | 0.4kg |
| | 04006.0-00 | 75W | 4.0A | 140mm | 0.5kg |
| RS 224-537 | 04007.0-00 | 100W | 4.5A | 140mm | 0.5kg |
| RS 224-543 | 04008.0-00 | 150W | 9.0A | 220mm | 0.7kg |

[2)]at 20°C ambient temperature

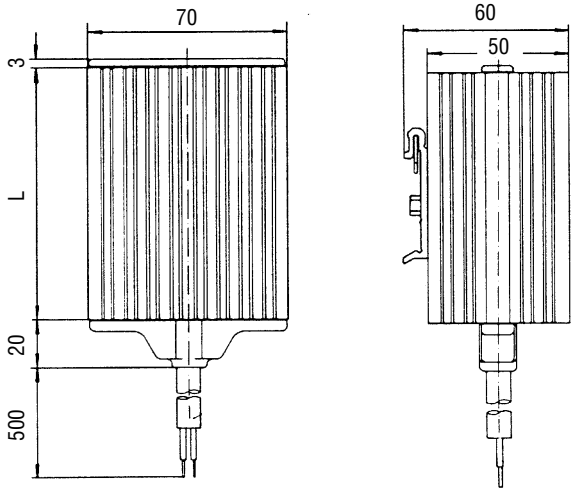


| | |
|---|---|
| **Operating voltage:** | **AC/DC 100-120V** |
| Heating element: | PTC resistor, self regulating and temperature limiting |
| Heater body: | extruded aluminium profile, anodised |
| Connection: | 3 x AWG18 x 500mm SJT sheathed cable |
| Mounting: | clip for 35mm DIN rail, EN 50022 |
| Fitting position: | preferably vertical |
| Operating / Storage temp.: | -40 to +70°C (-40 to +158°F) |
| Prot. type / Prot. class: | IP44 / II (double insulated) |
| Approvals: | UL File E150057 |
| Accessories: | screw fixing, art. no. 09024.0-00 |

| Art. No. | Heating capacity[2)] | Inrush current max. | Length (L) | Weight (approx.) |
|---|---|---|---|---|
| 04000.9-00 | 15W | 1.0A | 65mm | 0.3kg |
| 04001.9-00 | 30W | 1.0A | 65mm | 0.3kg |
| 04004.9-00 | 50W | 2.0A | 140mm | 0.5kg |
| 04007.9-00 | 80W | 2.5A | 220mm | 0.7kg |
| 04009.9-00 | 100W | 4.5A | 220mm | 0.7kg |

[2)]at 20°C (68°F) ambient temperature