Brand of NTN corporation

Technical data

UCPLE211

Bearing units



Grey cast housing, radial insert ball bearing with socket set screws,seal with slinger

KIT CONTENT

UC211G2, PLE211

VISUAL (S)

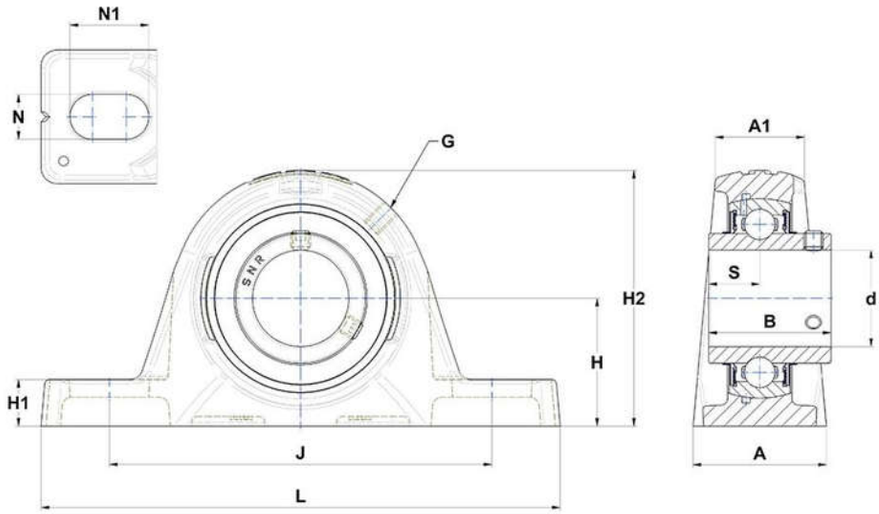

PRODUCT DEFINITION

Brand	SNR
A - Housing width	60 mm
A1 - Housing top width	39,5 mm
B - Width of Inner Ring	55,6 mm
d - Shaft diameter	55 mm
G - Grease fitting	M6x1

PRODUCT DEFINITION	
H - Distance mounting base to centerline spheric. seating diam.	61,3 mm
H1 - Housing foot height	23,2 mm
H2 - Housing height	128 mm
J - Mounting holes distance	170,5 mm
L - Housing length	219,5 mm
N - Mounting hole dimension	18 mm
N1 - Mounting hole length	26 mm
S - Distance front side/bearing centre	22,2 mm

PRODUCT PERFORMANCE	
C - Dynamic load rating	43550000 mN
C0 - Static load rating	29200000 mN
Operating temperature min.	253,15 °K
Operating temperature max.	373,15 °K

OTHER FEATURES	
Mass	3,92 kg
Recommended tightening torque for set screw	22 N-m