# IGC210

## Inductive sensor

IGKC008BASKG/M/US-104-DRS/2LED

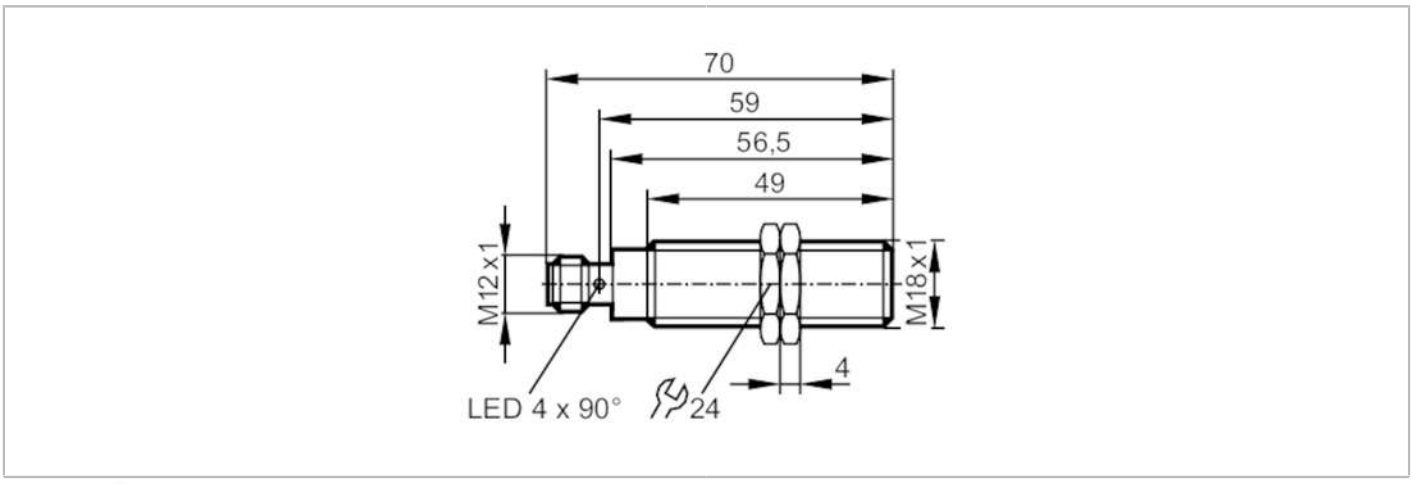


| | | |
|---|---|---|
| **Product characteristics** | | |
| Electrical design | | PNP/NPN |
| Output function | | normally open |
| Sensing range | [mm] | 8 |
| Housing | | threaded type |
| Dimensions | [mm] | M18 x 1 / L = 70 |
| **Application** | | |
| Special feature | | Gold-plated contacts; Increased sensing range; Optical setting aid |
| Application | | Use in machine tools, coolants and lubricants |
| **Electrical data** | | |
| Operating voltage | [V] | 10...30 DC |
| Current consumption | [mA] | 12;  (24 V) |
| Protection class | | II |
| Reverse polarity protection | | yes |
| **Outputs** | | |
| Electrical design | | PNP/NPN |
| Output function | | normally open |
| Max. voltage drop switching output DC | [V] | 2.8 |
| Minimum load current | [mA] | 4 |
| Max. leakage current | [mA] | 0.5;  (only in 2-wire operation) |
| Permanent current rating of switching output DC | [mA] | 100 |
| Switching frequency DC | [Hz] | 400 |
| Short-circuit protection | | yes |
| Type of short-circuit protection | | pulsed |
| Overload protection | | yes |
| **Detection zone** | | |
| Sensing range | [mm] | 8 |

# IGC210

## Inductive sensor

IGKC008BASKG/M/US-104-DRS/2LED

| | | | |
|---|---|---|---|
| Real sensing range Sr | [mm] | 8 ± 10 % | |
| Operating distance | [mm] | 0...6.5 | |
| Increased sensing range | | yes | |
| **Accuracy / deviations** | | | |
| Correction factor | | steel: 1 / stainless steel: 0.7 / brass: 0.5 / aluminium: 0.4 / copper: 0.3 | |
| Hysteresis | [% of Sr] | 3...15 | |
| Switch point drift | [% of Sr] | -10...10 | |
| **Operating conditions** | | | |
| Ambient temperature | [°C] | -25...70 | |
| Protection | | IP 68;  ("Coolant") | |
| **Tests / approvals** | | | |
| EMC | | EN 61000-4-2 ESD | 4 kV CD / 8 kV AD |
| | | EN 61000-4-3 HF radiated | 10 V/m |
| | | EN 61000-4-4 Burst | 2 kV |
| | | EN 61000-4-6 HF conducted | 10 V |
| | | EN 55011 | class B |
| MTTF | [years] | 1364 | |
| UL approval | | Ta | 0...40 °C |
| | | Enclosure type | Type 1 |
| | | power supply | Hazardous voltage |
| | | File number UL | E174191 |
| **Mechanical data** | | | |
| Weight | [g] | 75.4 | |
| Housing | | threaded type | |
| Mounting | | flush mountable | |
| Dimensions | [mm] | M18 x 1 / L = 70 | |
| Thread designation | | M18 x 1 | |
| Materials | | housing: brass white bronze coated; sensing face: ceramics | |
| **Displays / operating elements** | | | |
| Display | | switching status | 4 x 90° LED, yellow |
| | | setting aid | 1 x LED, red |
| Optical setting aid | | yes | |
| **Accessories** | | | |
| Items supplied | | lock nuts: 2 | |
| **Remarks** | | | |
| Remarks | | suitable for PLC type 1 according to IEC 61131-2 | |
| Pack quantity | | 1 pcs. | |

# IGC210

## Inductive sensor

**IGKC008BASKG/M/US-104-DRS/2LED**

## Electrical connection - plug

Connector: 1 x M12; coding: A; Contacts: gold-plated




