R2S175-AB56-01

AC centrifugal fan

backward curved, single inlet



ebm-papst Mulfingen GmbH & Co. KG
Bachmühle 2
D-74673 Mulfingen
Phone: +49(0)7938/81-0
Fax: +49(0)7938/81-110
info1@de.ebmpapst.com
www.ebmpapst.com

Nominal data

Type	**R2S175-AB56-01**
Motor	**M2S052-CA**

Phase		1~	1~
Nominal voltage	[V]	230	230
Frequency	[Hz]	50	60
Type of data definition		rfa	rfa
Valid for approval / standard		CE	CE
Speed	[min^{-1}]	2350	2300
Power input	[W]	53	51
Current draw	[A]	0.33	0.29
Min. back pressure	[Pa]	0	0
Max. ambient temperature	[°C]	40	55

ml = max. load · me = max. efficiency · rfa = running at free air · cs = customer specs · cu = customer unit
Subject to alterations

AC centrifugal fan

backward curved, single inlet

Technical features

Leackage current	< 0.75 mA
Size	175 mm
Operation mode	S1
Direction of rotation	Clockwise, seen on rotor
Mounting position	Any
Insulation class	"B"
Cable exit	Axial
Condensate discharge holes	None, open rotor
Bearing motor	Ball bearing
Mass	0.9 kg
Material of impeller	PA plastic 6, fiberglass-reinforced
Motor protection	Thermal overload protector (TOP) wired internally
Product conforming to standard	CE; EN 60335-1
Surface of rotor	Coated in black
Number of blades	7
Type of protection	IP 20
Protection class	I
Max. permissible ambient motor temp. (transp./ storage)	+ 80 °C
Min. permissible ambient motor temp. (transp./storage)	- 40 °C
Approval	CCC; GOST

ebm-papst Mulfingen GmbH & Co. KG · Bachmühle 2 · D-74673 Mulfingen · Phone: +49(0)7938/81-0 · Fax: +49(0)7938/81-110 · info1@de.ebmpapst.com · www.ebmpapst.com

AC centrifugal fan

backward curved, single inlet

Product drawing

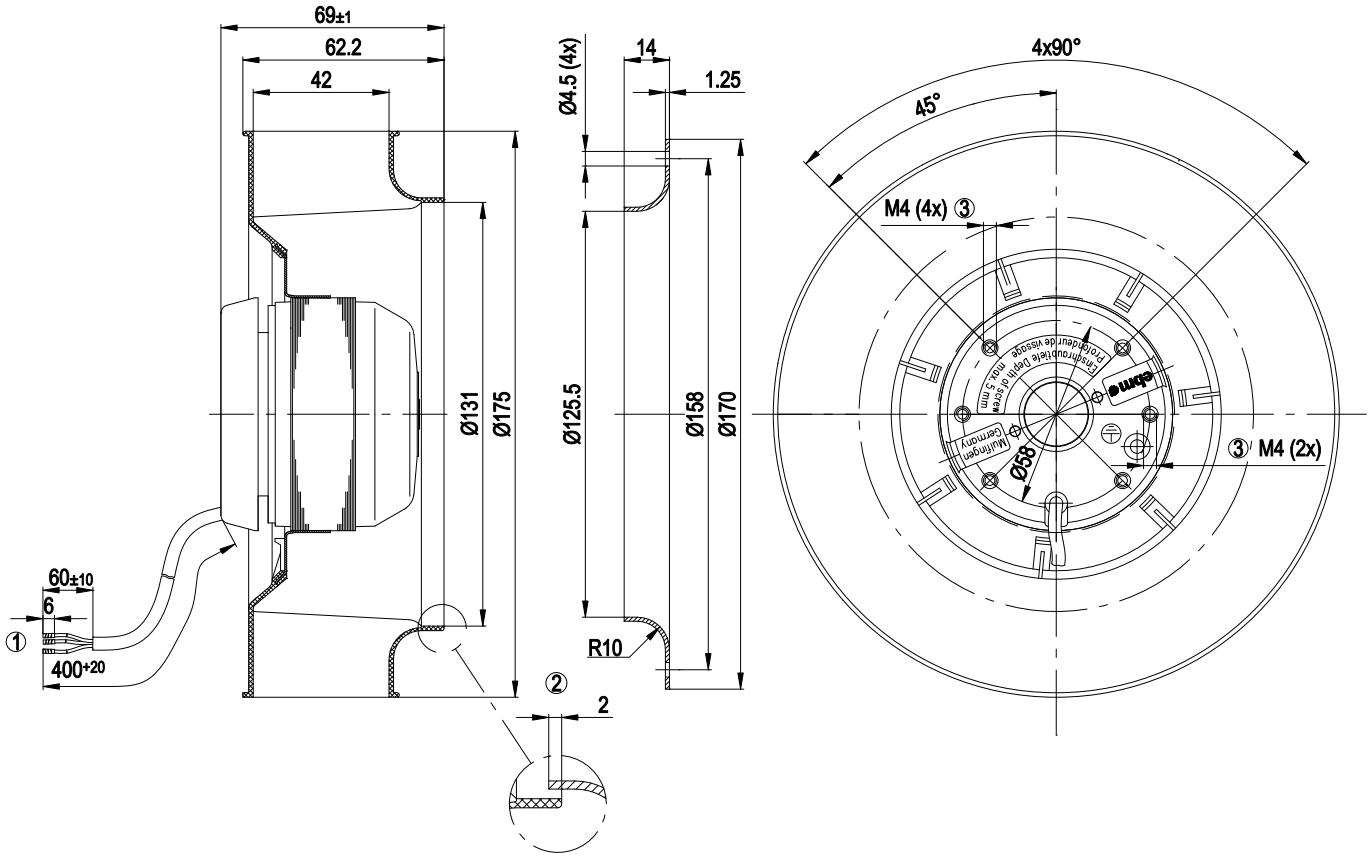

1	Connection line PVC, 3 x brass lead tips crimped
2	Accessory part: Inlet nozzle 09576-2-4013, not included in the standard scope of delivery
3	Screw depth max. 5 mm

Connection screen

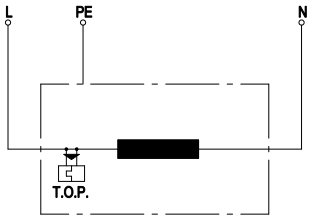

L	= blue
PE	= green / yellow
N	= brown
TOP	= Thermal overload protector

ebm-papst Mulfingen GmbH & Co. KG · Bachmühle 2 · D-74673 Mulfingen · Phone: +49(0)7938/81-0 · Fax: +49(0)7938/81-110 · info1@de.ebmpapst.com · www.ebmpapst.com

AC centrifugal fan

backward curved, single inlet

Charts: Air flow 50 Hz

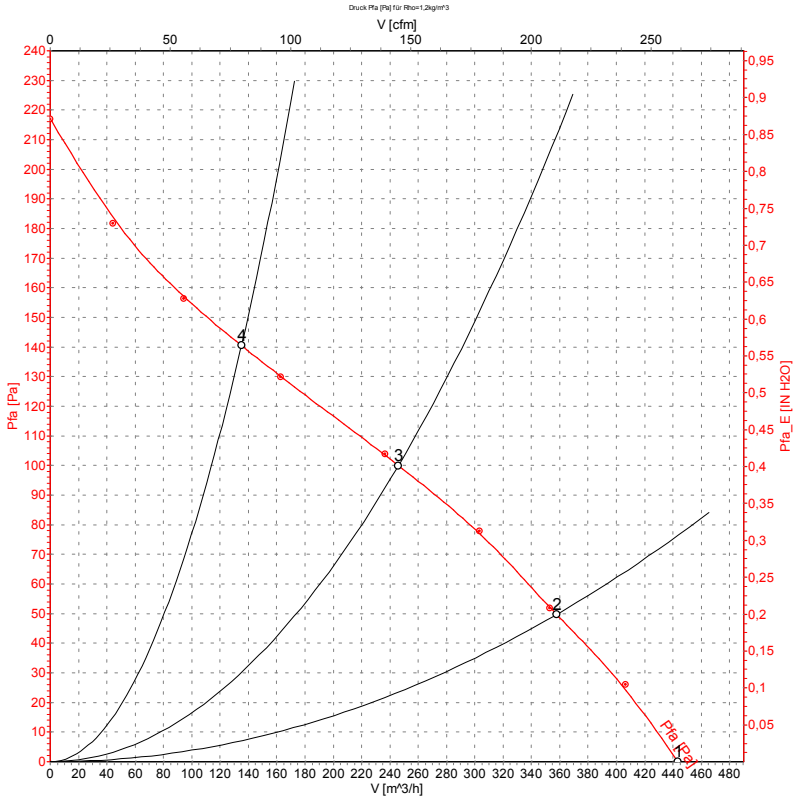

Measurement: LU-44427

Measured values

	U	f	n	P_1	I	$\dot{V}$	p_{fa}
	[V]	[Hz]	[min^{-1}]	[W]	[A]	[m^3/h]	[Pa]
1	230	50	2375	52	0.33	445	0
2	230	50	2245	54	0.33	360	50
3	230	50	2120	57	0.34	245	100
4	230	50	2175	55	0.34	135	140

ebm-papst Mulfingen GmbH & Co. KG · Bachmühle 2 · D-74673 Mulfingen · Phone: +49(0)7938/81-0 · Fax: +49(0)7938/81-110 · info1@de.ebmpapst.com · www.ebmpapst.com

AC centrifugal fan

backward curved, single inlet

Charts: Air flow 60 Hz

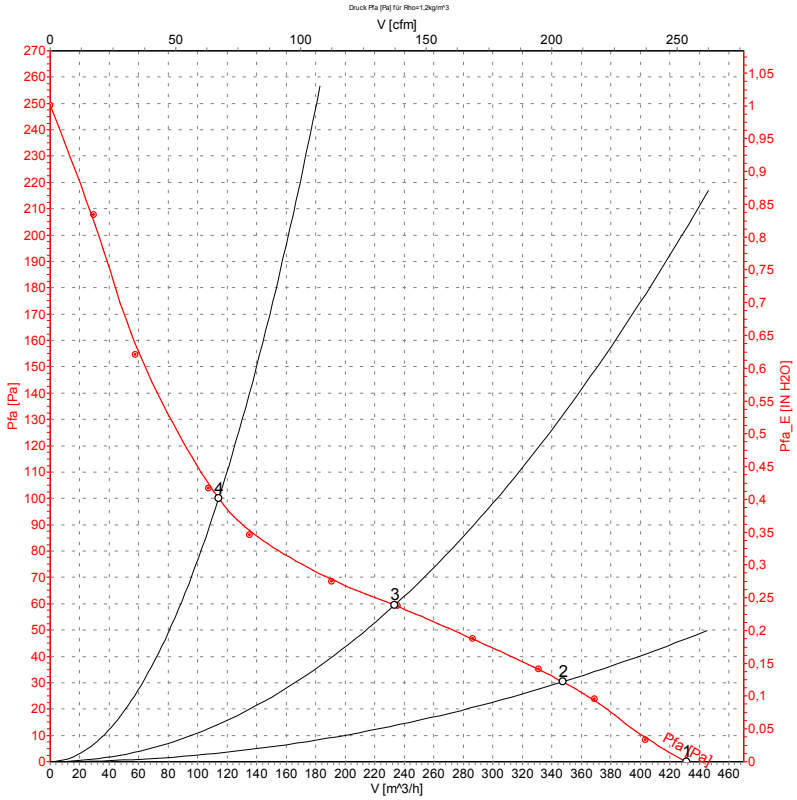

Measurement: LU-44428

Measured values

	U	f	n	P_1	I	$\dot{V}$	p_{fa}
	[V]	[Hz]	[min^{-1}]	[W]	[A]	[m^3/h]	[Pa]
1	230	60	2305	51	0.29	430	0
2	230	60	2060	53	0.30	345	30
3	230	60	1775	55	0.31	235	60
4	230	60	1825	54	0.30	115	100

ebm-papst Mulfingen GmbH & Co. KG · Bachmühle 2 · D-74673 Mulfingen · Phone: +49(0)7938/81-0 · Fax: +49(0)7938/81-110 · info1@de.ebmpapst.com · www.ebmpapst.com