

Model Number

V1-W-2M-PUR

Female cordset, M12, 4-pin, PUR cable

Features

- Knurled nut suitable for tool assembly
- Immunity to vibration, with mechanical latching
- Gold-plated and machined contacts
- Protection degree IP67 / IP68 / IP69K
- Halogen-free

Dimensions

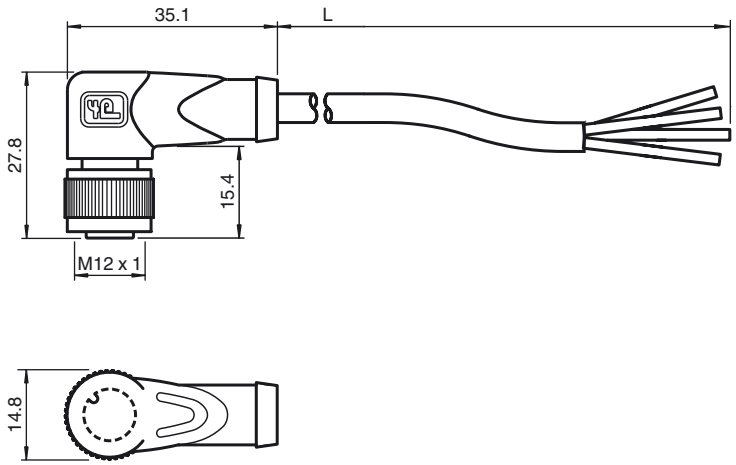

Technical data

General specifications		
Number of pins		4
Connection 1		socket
Construction type 1		right angle
Threading 1		M12
Connection 2		cable end
Electrical specifications		
Operating voltage	U_B	max. 250 V AC/DC
Operating current		max. 4 A
Volume resistance		< 5 mΩ
Ambient conditions		
Ambient temperature		Body: -40 ... 90 °C (-40 ... 194 °F) cable, fixed: -40 ... 80 °C (-40 ... 176 °F) cable, flexing: -25 ... 80 °C (-13 ... 176 °F)
Pollution Degree		3
Mechanical specifications		
Contact elements		spring-loaded contact socket
Pin diameter		1 mm
Protection degree		IP67 / IP68 / IP69k
Material		
Contacts		CuSn / Au
Contact surface		Au
Body		TPU, black
Cable		PUR
Slotted nut		Diecast zinc
Core insolation		PP
Cable		fine-strand, flexible
Sheath diameter		Ø 4.8 mm
Bending radius		> 10 x cable diameter, moving > 8 x cable diameter, fixed
Color		grey
Cores		4 x 0.34 mm^2
Conductor construction		19 x 0.15 mm Ø
Length	L	2 m
Flammability		
Contact material		HB
Housing		V-2
Compliance with standards and directives		
Standard conformity		
Protection degree		EN 60529:2000
Standards		IEC 61076-2-101:2008
Flammability		Grip: UL 94

Electrical connection

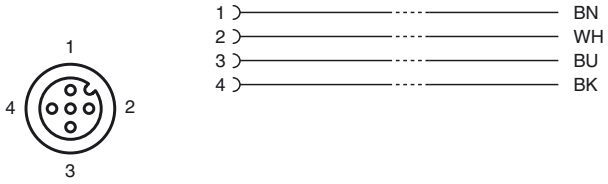

Release date: 2013-08-14 16:30 Date of issue: 2013-08-14 109437_eng.xml