Q45BB6 Series Sensors

10 to 30V dc photoelectric sensors with sinking and sourcing solid-state outputs



Q45BB6 Series Features

- Advanced one-piece photoelectric sensors with outstanding optical performance and extremely rugged design
- Operate from: 10 to 30V dc
- Bipolar NPN (sinking)/PNP (sourcing) outputs on all models
- Multiple sensing modes include: opposed, diffuse, retroreflective and convergent, plus glass and plastic fiber optic models
- Switchable light/dark operate
- Highly visible Power, Signal (AID™ System*), and Output indicator LEDs
- Versatile plug-in modules available for output timing logic and/or signal strength display
- Choice of prewired 2 m (6.5') or 9 m (30') unterminated cable, plus Mini-style or Euro-style quick-disconnect fittings
- Versatile mounting options
- Designed to withstand 1200 psi washdown; exceeds its NEMA 6P and IEC IP67 rating

*U.S. Patent no. 4356393

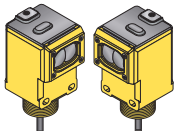

Because of their extremely high excess gain, these opposed-mode sensors are an excellent option for sensing in contaminated or dirty areas, and are also the best choice for long-range sensing.



Infrared, 880 nm

Q45BB6 Series Opposed-Mode Emitter (E) and Receiver (R) Models

Models	Range	Cable	Supply Voltage	Output Type	Excess Gain	Beam Pattern
Q456E Emitter **Q45BB6R** Receiver	60 m (200')	2-wire 2m (6.5') 4-wire 2m (6.5')	10 to 30V dc	Bipolar NPN/PNP	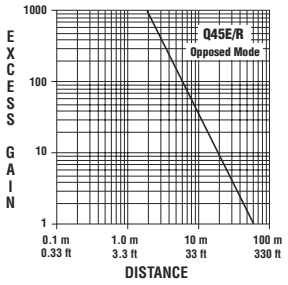	**Effective Beam: 13 mm** 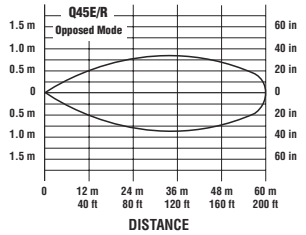
Q456EQ Emitter **Q45BB6RQ** Receiver		4-Pin Mini-style QD				
Q456EQ5 Emitter **Q45BB6RQ5** Receiver		4-Pin Euro-style QD				

NOTES: i) 9 m (30') cables are available by adding suffix "W/30" to the model number of any cabled sensor (e.g., **Q456E W/30**)
ii) A model with a QD connector requires a mating cable; see page 10.

IMPORTANT: SEE SAFETY USE WARNING ON BACK PAGE

Q45BB6 Series

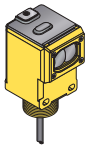

The visible red sensing beam of these sensors makes them very easy to align. Model Q45BB6LP polarizes the emitted light and filters out unwanted reflections, making sensing possible in applications otherwise considered unsuited to retroreflective sensing. Performance is specified using the model BRT-3 3" reflector (see the Accessories section of your current Banner Photoelectric Sensors catalog for further information).



Visible red, 680 nm
Non-Polarized *Polarized*

Q45BB6 Series Retroreflective-Mode Models

Models	Range	Cable	Supply Voltage	Output Type	Excess Gain	Beam Pattern
Non-Polarized						
Q45BB6LV **Q45BB6LVQ** **Q45BB6LVQ5**	0.08 to 9 m (3" to 30')	4-wire 2 m (6.5') 4-Pin Mini-style QD 4-Pin Euro-style QD	10 to 30V dc	Bipolar NPN/PNP	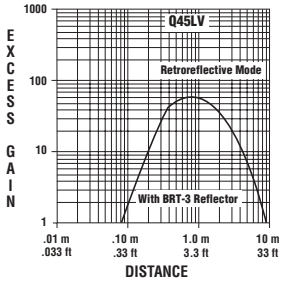	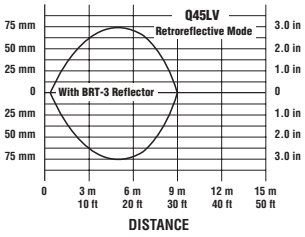
Polarized						
Q45BB6LP **Q45BB6LPQ** **Q45BB6LPQ5**	0.15 to 6 m (6" to 20')	4-wire 2 m (6.5') 4-Pin Mini-style QD 4-Pin Euro-style QD	10 to 30V dc	Bipolar NPN/PNP	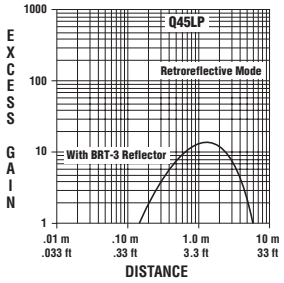	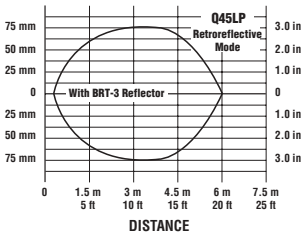

NOTES:
i) 9 m (30') cables are available by adding suffix "W/30" to the model number of any cabled sensor (e.g., **Q45BB6LV W/30**)
ii) A model with a QD connector requires a mating cable; see page 10.

Banner Engineering Corp. • Minneapolis, MN U.S.A.
www.bannerengineering.com • Tel: 763.544.3164

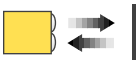

Infrared, 880 nm

These diffuse-mode models detect objects by sensing the reflection of their own emitted light. Ideal for use when the reflectivity and profile of the object to be sensed are sufficient to return a large percentage of emitted light back to the sensor. Model Q45BB6DX is the first choice for diffuse-mode applications when there are no background objects to falsely return light.

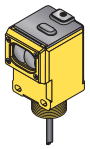

Q45BB6 Series Diffuse-Mode Models

Models	Range	Cable	Supply Voltage	Output Type	Excess Gain	Beam Pattern
					Performance based on 90% reflectance white test card	
Short Range						
Q45BB6D **Q45BB6DQ** **Q45BB6DQ5**	450 mm (18")	4-wire 2 m (6.5') 4-Pin Mini-style QD 4-Pin Euro-style QD	10 to 30V dc	Bipolar NPN/PNP	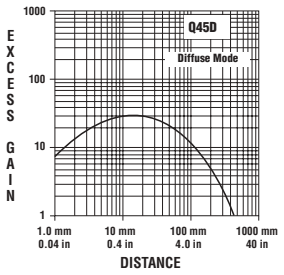	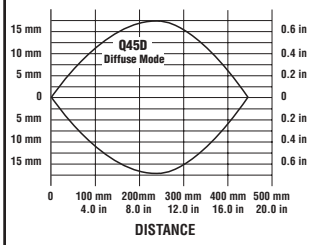
Long Range						
Q45BB6DL **Q45BB6DLQ** **Q45BB6DLQ5**	1.8 m (6')	4-wire 2 m (6.5') 4-Pin Mini-style QD 4-Pin Euro-style QD	10 to 30V dc	Bipolar NPN/PNP	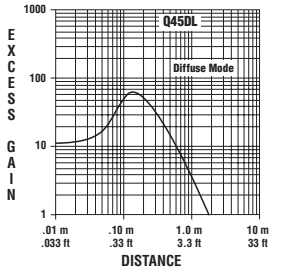	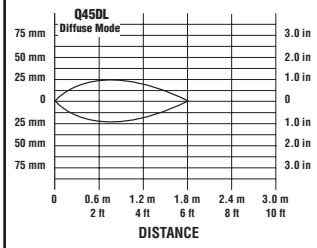
High Power						
Q45BB6DX **Q45BB6DXQ** **Q45BB6DXQ5**	3 m (10')	4-wire 2 m (6.5') 4-Pin Mini-style QD 4-Pin Euro-style QD	10 to 30V dc	Bipolar NPN/PNP	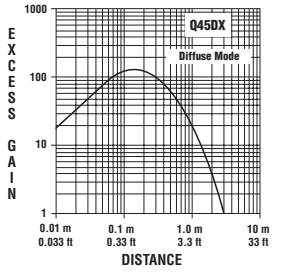	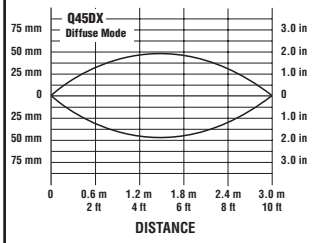

Q45BB6 Series

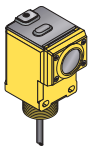

These sensors are ideal for reflective sensing of very small parts or profiles, and can accurately sense the position of parts approaching from the side. Will ignore all but highly reflective objects that are outside the sensing range.

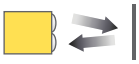

Visible red. 680 nm

Q45BB6 Series Convergent-Mode Models

Models	Focus	Cable	Supply Voltage	Output Type	Excess Gain	Beam Pattern
					Performance based on 90% reflectance white test card	
Q45BB6CV **Q45BB6CVQ** **Q45BB6CVQ5**	38 mm (1.5") **Spot Size at Focus:** 1.3 mm (0.05")	4-wire 2 m (6.5') 4-Pin Mini-style QD 4-Pin Euro-style QD	10 to 30V dc	Bipolar NPN/PNP	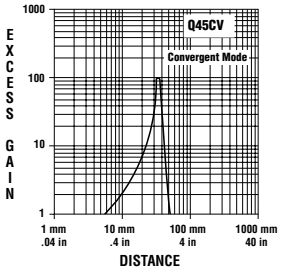	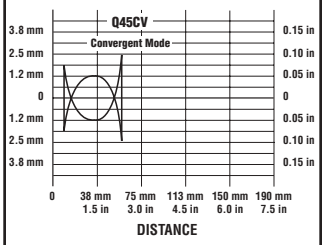
Q45BB6CV4 **Q45BB6CV4Q** **Q45BB6CV4Q5**	100 mm (4") **Spot Size at Focus:** 1.5 mm (0.06")	4-wire 2 m (6.5') 4-Pin Mini-style QD 4-Pin Euro-style QD	10 to 30V dc	Bipolar NPN/PNP	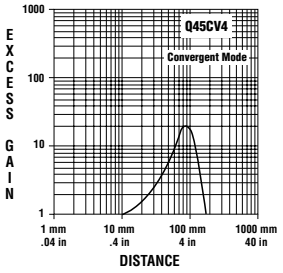	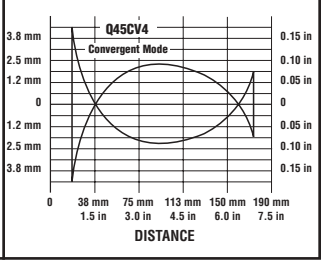

NOTES:

i) 9 m (30') cables are available by adding suffix "W/30" to the model number of any cabled sensor (e.g., **Q45BB6CV W/30**)

ii) A model with a QD connector requires a mating cable; see page 10.

Banner Engineering Corp. • Minneapolis, MN U.S.A.
www.bannerengineering.com • Tel: 763.544.3164



Infrared, 880 nm and Visible red, 650 nm

These models are an excellent choice for glass fiber optic applications where faster sensor response is not important. Their high excess gain means that opposed individual fibers can operate reliably in many very hostile environments. Also, special miniature bifurcated fiber optic assemblies with bundle sizes as small as .5 mm (.020") dia. may be used successfully for diffuse-mode sensing when using sensor model Q45BB6F(Q). For more information on compatible glass fiber optics, refer to your current Banner Photoelectric Sensors catalog.

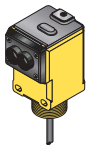

Q45BB6 Series Glass Fiber-Optic Models

Models	Range	Cable	Supply Voltage	Output Type	Excess Gain	Beam Pattern
					Diffuse mode performance based on 90% reflectance white test card	
Infrared, 880 nm						
Q45BB6F **Q45BB6FQ** **Q45BB6FQ5**	Range varies by sensing mode and fiber optics used	4-wire 2 m (6.5') 4-Pin Mini-style QD 4-Pin Euro-style QD	10 to 30V dc	Bipolar NPN/PNP	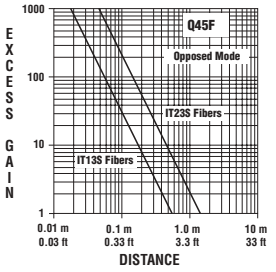 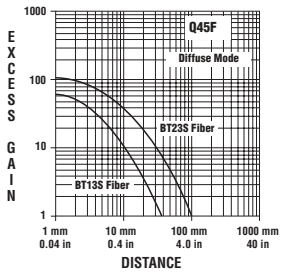	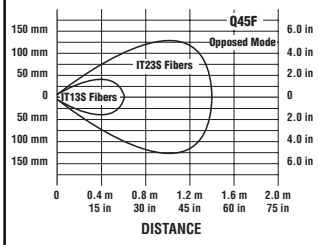 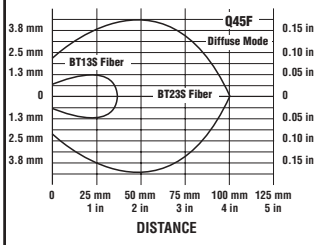
Visible Red, 650 nm						
Q45BB6FV **Q45BB6FVQ** **Q45BB6FVQ5**	Range varies by sensing mode and fiber optics used	4-wire 2 m (6.5') 4-Pin Mini-style QD 4-Pin Euro-style QD	10 to 30V dc	Bipolar NPN/PNP	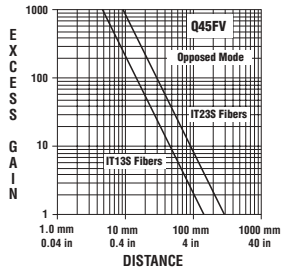 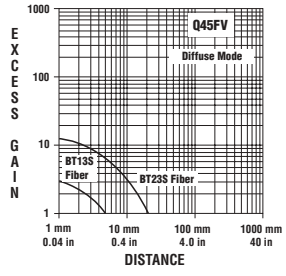	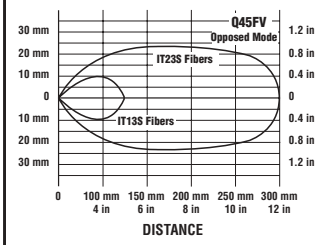 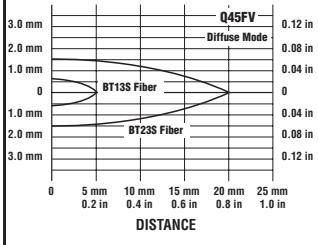

Q45BB6 Series

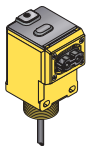

Lower in cost than glass fiber optics, plastic fiber optics are ideal for use in situations where environmental conditions allow (for example, low levels of acids, alkalis, and solvents). Most are easily cut to length in the field, and are available in a variety of sensing end styles. For more information on compatible plastic fiber optics, refer to your current Banner Photoelectric Sensors catalog.



Visible red, 660 nm

Q45BB6 Series Plastic Fiber-Optic Models

Models	Range	Cable	Supply Voltage	Output Type	Excess Gain	Beam Pattern
					Diffuse mode performance based on 90% reflectance white test card	
Q45BB6FP **Q45BB6FPQ** **Q45BB6FPQ5**	Range varies by sensing mode and fiber optics used	4-wire 2 m (6.5') 4-Pin Mini-style QD 4-Pin Euro-style QD	10 to 30V dc	Bipolar NPN/PNP	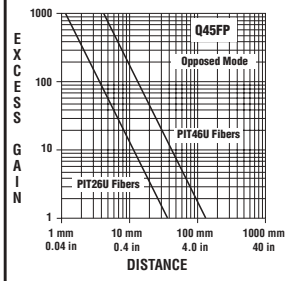 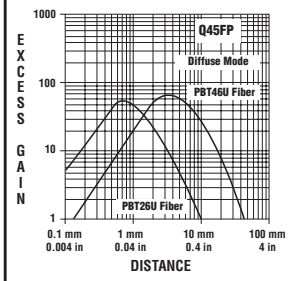	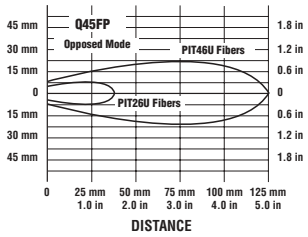 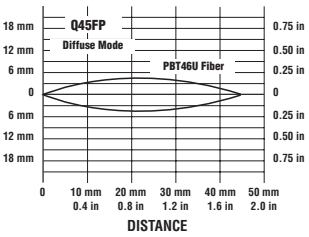

NOTES:

i) 9 m (30') cables are available by adding suffix "W/30" to the model number of any cabled sensor (e.g., **Q45BB6FP W/30**)

ii) A model with a QD connector requires a mating cable; see page 10.

Banner Engineering Corp. • Minneapolis, MN U.S.A.
www.bannerengineering.com • Tel: 763.544.3164

Q45BB6 Series Specifications

Supply Voltage and Current	10 to 30V dc (10% maximum ripple), at less than 50 mA (exclusive of load)
Supply Protection Circuitry	Protected against reverse polarity and transient voltages
Output Configuration	Bipolar: one current sourcing (PNP) and one current sinking (NPN) open-collector transistor
Output Rating	250 mA maximum each output up to 50°C, derated to 150 mA at 70°C (derates 5 mA/°C) **Off-state leakage** current less than 1 microamp **Output saturation voltage** (both outputs) less than 1 volt at 10 mA and less than 2 volts at 250 mA
Output Protection Circuitry	Protected against false pulse on power-up and continuous overload or short circuit of outputs
Output Response Time	**Opposed mode:** 2 milliseconds ON, 1 millisecond OFF **All other sensing modes:** 2 milliseconds ON/OFF (NOTE: 100 millisecond delay on power-up. Output is non-conducting during this time.)
Repeatability	**Opposed mode:** 0.25 milliseconds **All other sensing modes:** 0.5 milliseconds Response time and repeatability specifications are independent of signal strength.
Adjustments	**Beneath sensor's transparent cover:** Light/Dark Operate select switch and multi-turn Sensitivity control (allows precise sensitivity setting – turn clockwise to increase gain). Optional logic and logic/display modules have adjustable timing functions (see page 10).
Indicators	Indicator LEDs are clearly visible beneath a raised transparent Lexan® dome on top of the sensor. **Power (green) LED** lights whenever 10 to 30V dc power is applied, and flashes to indicate output overload or output short circuit **Signal (red) AID™ System LED** lights whenever the sensor sees its modulated light source, and pulses at a rate proportional to the strength of the received light signal **Load (yellow) LED** lights whenever the output is energized **Optional 7-element LED** signal strength display modules
Construction	Molded reinforced thermoplastic polyester housing, o-ring-sealed transparent Lexan® cover, molded acrylic lenses, and stainless steel hardware. Q45s are designed to withstand 1200 psi washdown. The base of cabled models has a 1/2" NPS integral internal conduit thread.
Environmental Rating	NEMA 6P, IEC IP67
Connections	PVC-jacketed 2 m (6.5') or 9 m (30') cables; or 4-pin Mini-style ("Q" suffix models) or 4-pin Euro-style ("Q5" suffix models) quick-disconnect (QD) fittings are available. QD cables are ordered separately; see page 10.
Operating Conditions	**Temperature:** -40° to +70°C (-40° to +158°F) **Maximum relative humidity:** 90% at 50°C (non-condensing)
Application Notes	Optional output timing modules are available. See page 10 for more information.
Certifications	

Lexan® is a registered trademark of General Electric Co.

Q45BB6 Series Dimensions

Opposed, Retro, and Diffuse Sensing Modes (model suffix E, R, D, DL, DX, LP & LV)

Cabled

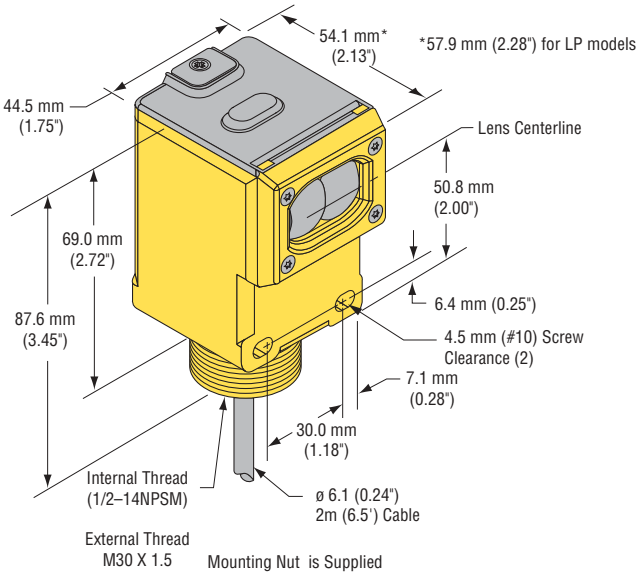

Mini-Style Quick-Disconnect

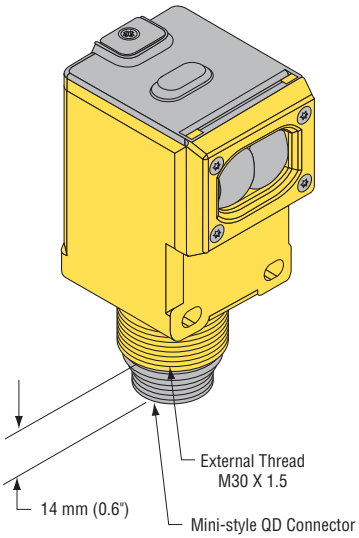

Euro-Style Quick-Disconnect

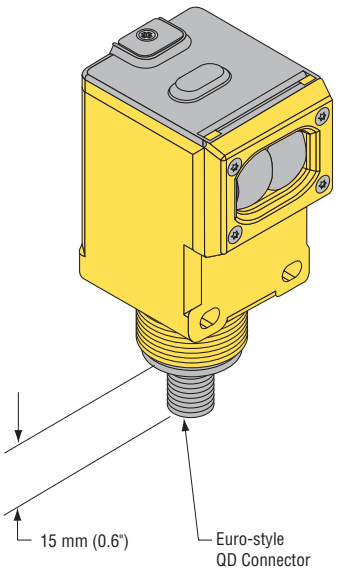

Convergent Sensing Mode (model suffix CV & CV4)

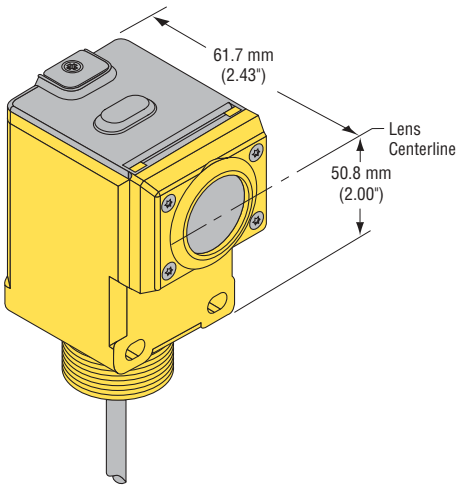

Glass Fiber Optic (model suffix F and FV)

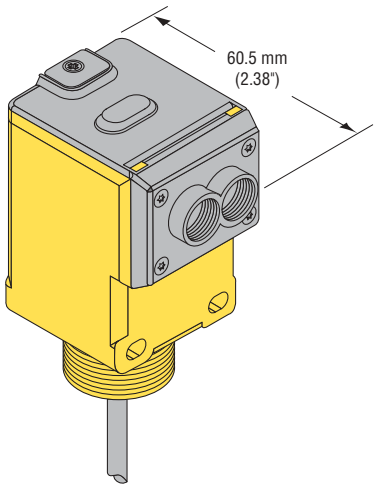

Plastic Fiber Optic (model suffix FP)

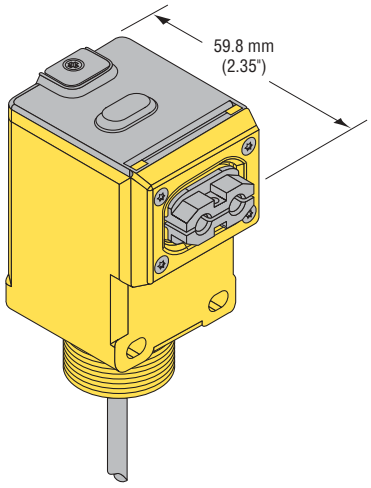

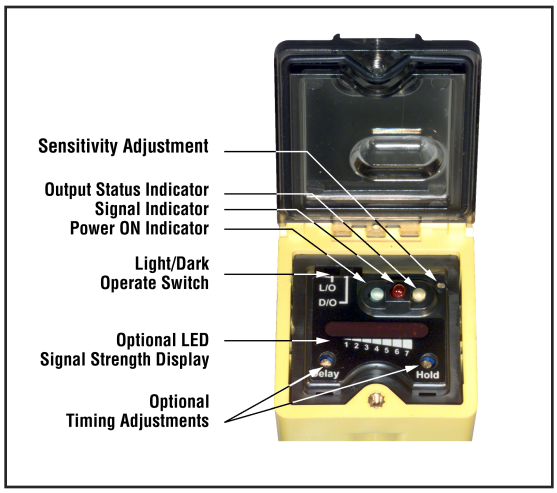

Figure 1. Indicators and controls on the Q45BB6 series sensors

Q45BB6 Series Indicators and Controls

Status indicator LEDs for Power, Signal and Output are clearly visible beneath a raised dome in the sensor's transparent o-ring-sealed Lexan® cover. The Power indicator lights whenever power is applied to the sensor. The Signal LED lights whenever the sensor sees its modulated light source, and pulses at a rate proportional to the strength of the received light signal; this is the AID™ Alignment Indicating Device*. The Output indicator lights whenever the sensor's output is conducting. This indicator is especially useful when a timing logic module is used and Signal and Output conditions are not concurrent.

Also located beneath the sensor's o-ring-sealed cover are controls for light/dark operate selection and Sensitivity adjustment.

* US patent no. 4356393

Q45BB6 Series Hookups

Q45BB6 Sensors with Attached Cable

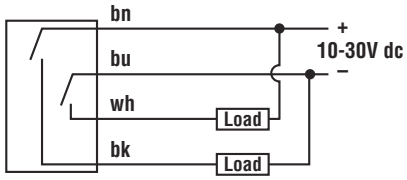

Q45BB6 Sensors with Quick-Disconnect 4-Pin Mini-Style or 4-Pin Euro-Style (model suffix Q and Q5)

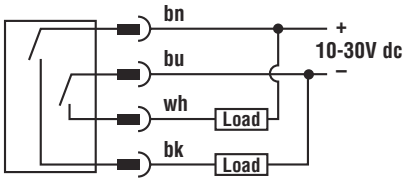

Q456E Emitters with Attached Cable

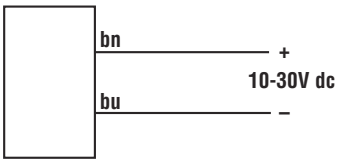

Q456E Emitters with Quick-Disconnect 4-Pin Mini-Style or 4-Pin Euro-Style (model suffix Q and Q5)

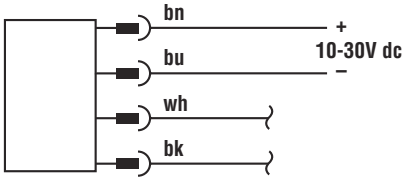

Quick Disconnect (QD) Option

DC Q45BB6 Series sensors are sold with either a 2 m (6.5') or a 9 m (30') PVC-covered unterminated cable, or with a 4-pin Mini-style or 4-pin Euro-style Quick-Disconnect (QD) cable fitting.

Mini-style QD sensors are identified by the suffix "Q" in their model number and 4-pin Euro-style sensors are identified by the suffix "Q5". Mating cables required for QD Q45BB6 sensors are specified on page 10.

Accessories

Quick-Disconnect Cables

Cable: PVC jacket; polyurethane connector body; nylon coupling nut (Mini), chrome-plated brass coupling nut (Euro)
Conductors: 18 AWG (Mini), 22 or 20 AWG (Euro) high-flex stranded, PVC insulation, gold plated contacts
Temperature: -40° to +80°C (-40° to +176°F) (Mini); -48° to +90° (-40° to +194°F) (Euro)
Voltage Rating: 250V ac/300V dc

Style	Model	Length	Dimensions	Pin-Out (Female View)
4-Pin Euro-Style Straight	**MQDC-406** **MQDC-415** **MQDC-430**	2 m (6.5') 5 m (15') 10 m (30')	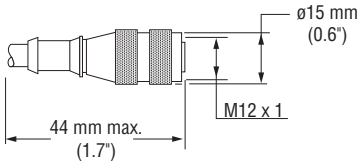	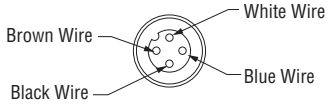
4-Pin Mini-Style Straight	**MBCC-406** **MBCC-412** **MBCC-430**	2 m (6.5') 4 m (12') 9 m (30')	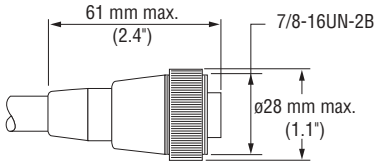	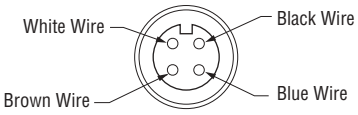

Contact factory for right-angle connectors.

Retroreflective Targets

Banner offers a wide selection of high-quality retroreflective targets. See the Accessories section of your current Banner Photoelectric Sensors catalog for complete information.

NOTE: Polarized sensors require corner cube type retroreflective targets only. Non-polarized sensors may use any retroreflective target.

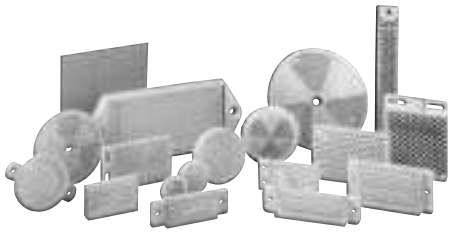

Output Timing Logic and Signal Strength Display Modules

Q45 sensors easily accept the addition of output timing logic and signal strength display functions. Display modules have a seven-element display which gives a more precise indication of excess gain than does the AID™ system LED that is standard on Q45 sensors. The modules listed below may be used with all Q45BB6 Series sensors. See the data sheet packed with the module for more information.

Model	Logic and/or Display Function	
45LM58	Programmable output timing logic	
45LM58D	Programmable output timing logic plus signal strength display	
45LMD	Signal strength display only (no timing function)	

Banner Engineering Corp. • Minneapolis, MN U.S.A.
www.bannerengineering.com • Tel: 763.544.3164

Mounting Brackets

Model	Description	Dimensions
SMB30C	• 30 mm split clamp, black reinforced thermoplastic polyester bracket • Stainless steel mounting hardware included	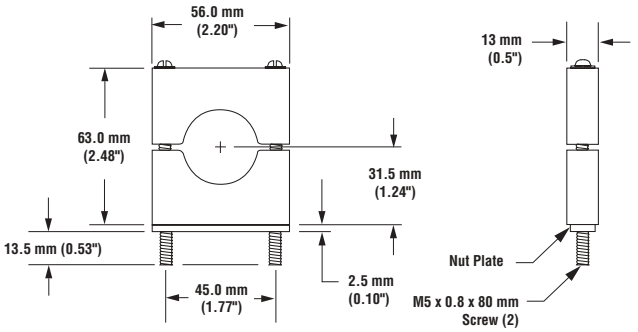
SMB30MM	• 30 mm, 11-gauge, stainless steel bracket with curved mounting slots for versatility and orientation • Clearance for M6 (1/4") hardware	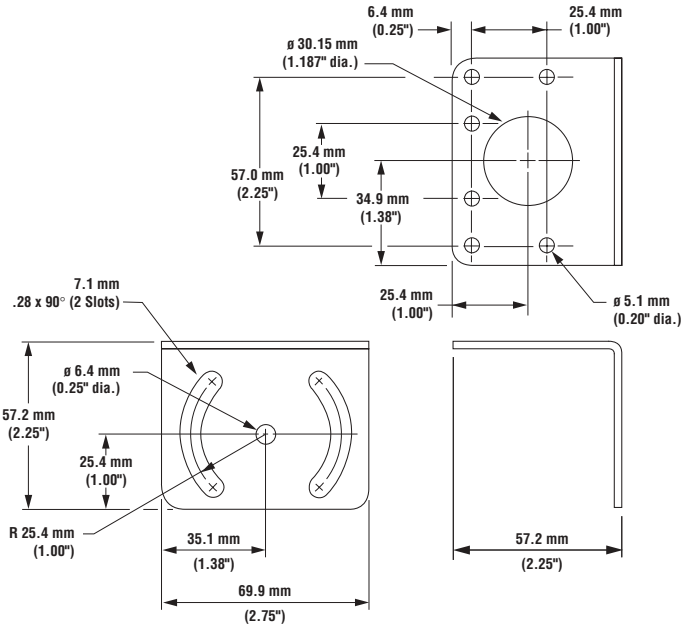
SMB30SC	• 30 mm swivel, black reinforced thermoplastic polyester bracket • Stainless steel mounting hardware included	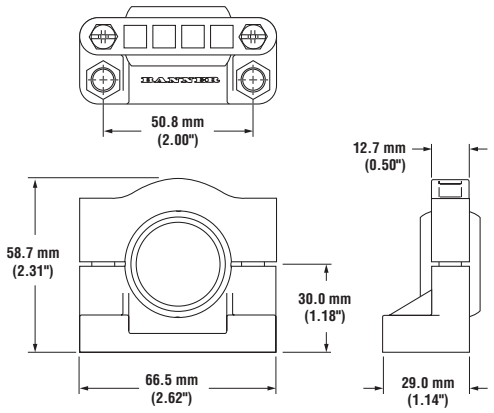

Q45BB6 Series



WARRANTY: Banner Engineering Corp. warrants its products to be free from defects for one year. Banner Engineering Corp. will repair or replace, free of charge, any product of its manufacture found to be defective at the time it is returned to the factory during the warranty period. This warranty does not cover damage or liability for the improper application of Banner products. This warranty is in lieu of any other warranty either expressed or implied.



WARNING . . . Not To Be Used for Personnel Protection

Never use these products as sensing devices for personnel protection. Doing so could lead to serious injury or death.

These sensors do NOT include the self-checking redundant circuitry necessary to allow their use in personnel safety applications. A sensor failure or malfunction can cause either an energized or de-energized sensor output condition. Consult your current Banner Safety Products catalog for safety products which meet OSHA, ANSI and IEC standards for personnel protection.

Banner Engineering Corp., 9714 Tenth Ave. No., Minneapolis, MN 55441 • Phone: 763.544.3164 • www.bannerengineering.com • E-mail: sensors@bannerengineering.com