DATASHEET - CI-PKZ0-GM



Insulated enclosure, IP55_x, rotary handle black grey, for PKZ0

Part no.	**CI-PKZ0-GM**
Catalog No.	**260089**
Alternate Catalog No.	**XTPAXENCS55B**

Delivery program

Product range			Accessories
Subrange			Surface mounting enclosures
Accessories			Insulated enclosures for PKZ
			with black-grey rotary knob
Degree of Protection			IP55
For use with			PKZM0-… +NHI-E +NHI or U or A +L-PKZ0 (2 off)

Notes With integrated PE(N) terminal.
In each case 2 metric M25 cable entry knockouts with thread top and bottom.
2 metric M20 cable entry knockouts in the rear wall.
Hard mirror with cable entry knockouts which can be cut out.

Design verification as per IEC/EN 61439

Technical data for design verification			
Rated operational current for specified heat dissipation	I_n	A	0
Heat dissipation per pole, current-dependent	P_{vid}	W	0
Equipment heat dissipation, current-dependent	P_{vid}	W	0
Static heat dissipation, non-current-dependent	P_{vs}	W	0
Heat dissipation capacity	P_{diss}	W	10
Operating ambient temperature min.		°C	-25
Operating ambient temperature max.		°C	70
IEC/EN 61439 design verification			
10.2 Strength of materials and parts			
10.2.2 Corrosion resistance			Meets the product standard's requirements.
10.2.3.1 Verification of thermal stability of enclosures			Meets the product standard's requirements.
10.2.3.2 Verification of resistance of insulating materials to normal heat			Meets the product standard's requirements.
10.2.3.3 Verification of resistance of insulating materials to abnormal heat and fire due to internal electric effects			Meets the product standard's requirements.
10.2.4 Resistance to ultra-violet (UV) radiation			Please enquire
10.2.5 Lifting			Does not apply, since the entire switchgear needs to be evaluated.
10.2.6 Mechanical impact			Does not apply, since the entire switchgear needs to be evaluated.
10.2.7 Inscriptions			Meets the product standard's requirements.
10.3 Degree of protection of ASSEMBLIES			Does not apply, since the entire switchgear needs to be evaluated.
10.4 Clearances and creepage distances			Meets the product standard's requirements.
10.5 Protection against electric shock			Does not apply, since the entire switchgear needs to be evaluated.
10.6 Incorporation of switching devices and components			Does not apply, since the entire switchgear needs to be evaluated.
10.7 Internal electrical circuits and connections			Is the panel builder's responsibility.
10.8 Connections for external conductors			Is the panel builder's responsibility.
10.9 Insulation properties			
10.9.2 Power-frequency electric strength			Is the panel builder's responsibility.
10.9.3 Impulse withstand voltage			Is the panel builder's responsibility.
10.9.4 Testing of enclosures made of insulating material			Is the panel builder's responsibility.
10.10 Temperature rise			The panel builder is responsible for the temperature rise calculation. Eaton will provide heat dissipation data for the devices.
10.11 Short-circuit rating			Is the panel builder's responsibility. The specifications for the switchgear must be observed.

10.12 Electromagnetic compatibility			Is the panel builder's responsibility. The specifications for the switchgear must be observed.
10.13 Mechanical function			The device meets the requirements, provided the information in the instruction leaflet (IL) is observed.

Technical data ETIM 7.0

Low-voltage industrial components (EG000017) / Empty enclosure for switchgear (EC000712)

Electric engineering, automation, process control engineering / Low-voltage switch technology / Component for low-voltage switching technology / Empty housing for switch devices (ecl@ss10.0.1-27-37-13-01 [AKN343014])

Material housing			Plastic
Width		mm	80
Height		mm	160
Depth		mm	97
With transparent cover			No
Suitable for emergency stop			No
Model			Surface mounting
Degree of protection (IP)			IP55
Degree of protection (NEMA)			Other

Approvals

Specially designed for North America			No

Dimensions

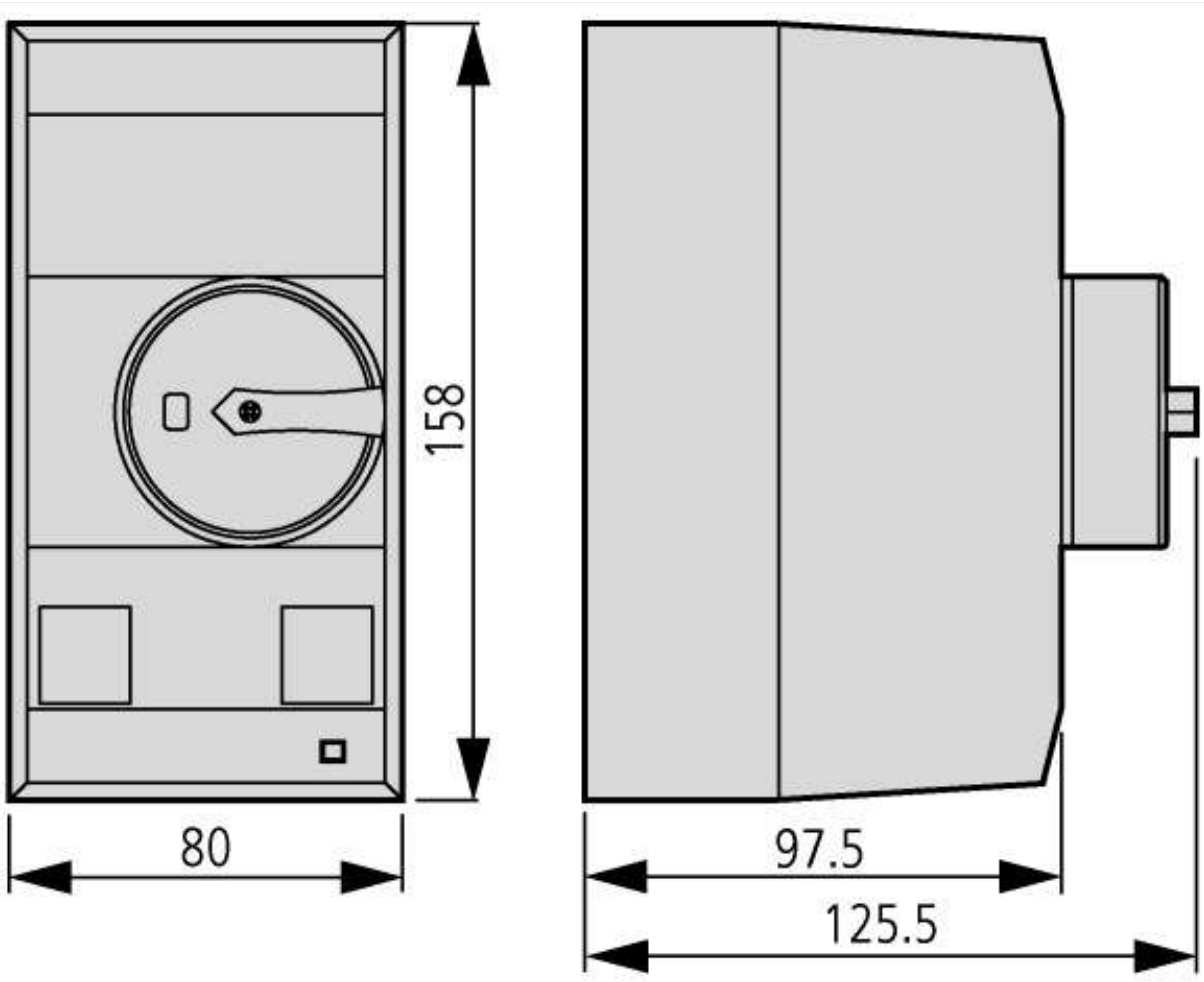

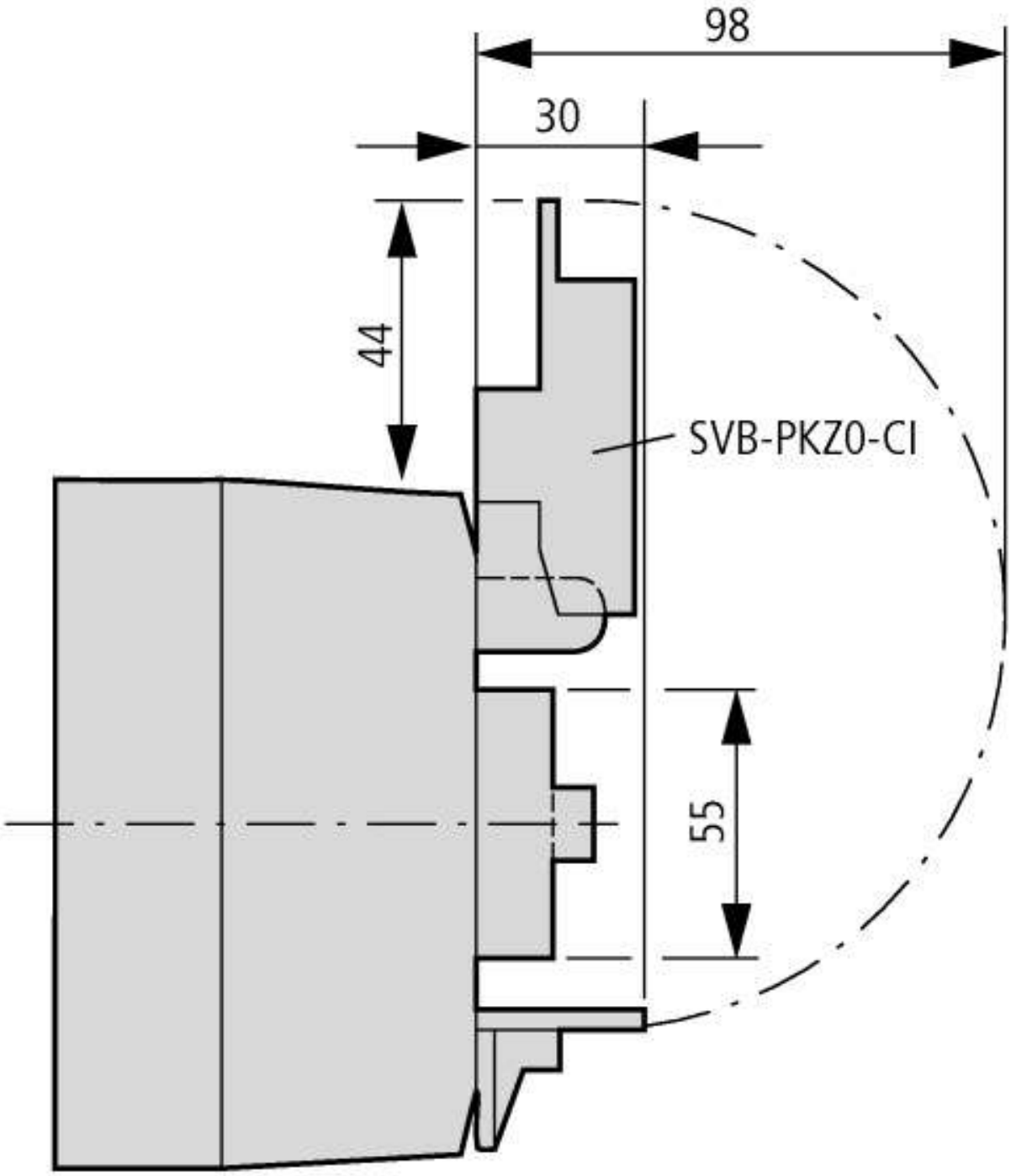

CI-K2-PKZ0-…M + SVB-PKZ0-CI

+ SVB-PKZ0-CI

© 02/2021 by Eaton Industries GmbH