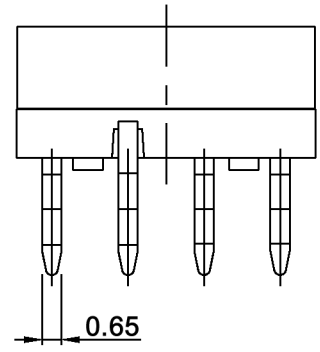

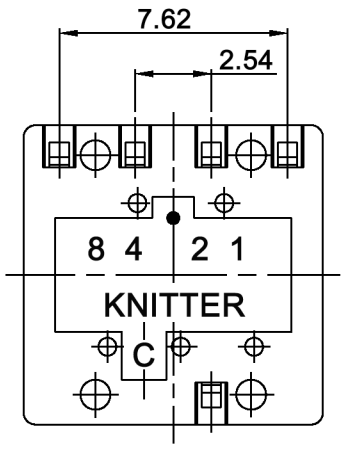

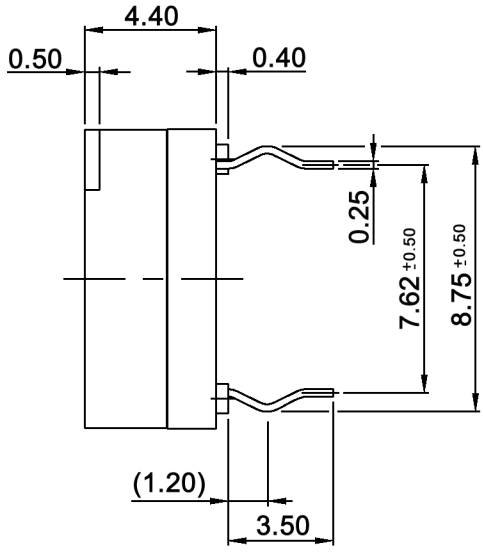

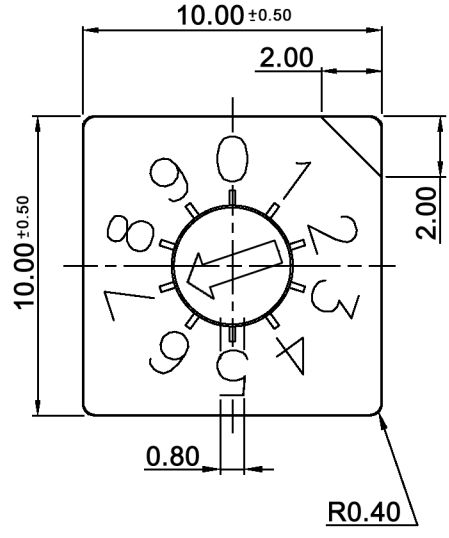

TYPE	CIRCUIT CHARACTERISTIC									
DRS 3110	CODE	POSITION ● ON								
		0	1	2	3	4	5	6	7	8	9
	1	●		●		●		●		●	
	2	●	●			●	●			●	●
	4	●	●	●	●					●	●
	8	●	●	●	●	●	●	●	●		

P.C.B. LAYOUT

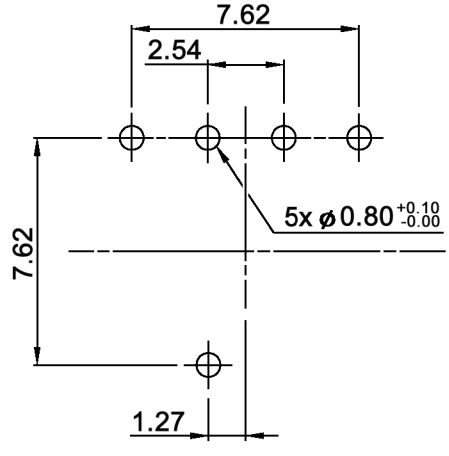

Compliance: RohS II (2011/65/EU)

Tolerances: ±0.20mm max.			Date	Name
			02/09	dr
Delivery position	11/11	dr		
Modifications	Date	Name		

DRS 3110

knitter-switch

30 17 31

Page 1/2

Specifications:

Contact rating:	non-switching: 100mA, 50V DC switching: 30mA, 15V DC
Contact resistance:	100mOhm max.
Insulation resistance:	1 000MOhm min. at 250V DC
Dielectric strength:	250V AC for 1 minute
Operating temperature:	-40°C to +85°C
Mechanical life:	20 000 cycles min.
Operating force:	250 gf.cm max.
Material:	Base / cover: high-temp. thermoplastic nylon UL94V-0, molded black Movable contact: alloy copper, gold plated Actuator: high-temp. thermoplastic nylon UL94V-0, color: red O-ring: silicone Spring: stainless steel Terminal: brass, gold plated
Soldering conditions:	wave soldering: 260°C, 5sec. max. through hole reflow: 260 +/-5°C, 4-6sec.

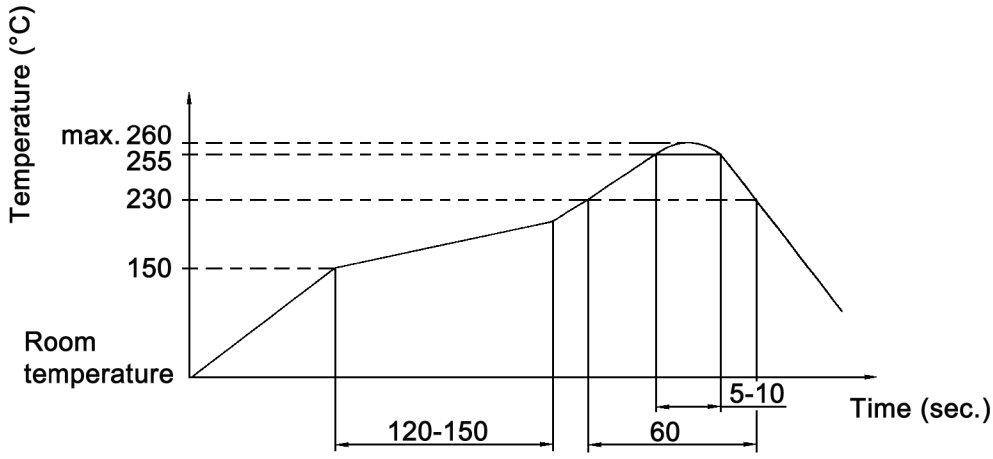

Compliance: RohS II (2011/65/EU)

Tolerances: ±0.20mm max.			Date	Name	DRS 3110	
			02/09	dr		
			knitter-switch		30 17 31	Page 2/2
Modifications	Date	Name				