BF80T4A024

FOUR-POLE CONTACTOR, IEC OPERATING CURRENT ITH (AC1) = 115A, AC COIL 50/60HZ, 24VAC



Product designation			Power contactor
Product type designation			BF80
Contact characteristics			
Number of poles		nr.	3
Rated insulation voltage Ui		V	1000
Rated impulse withstand voltage Uimp		kV	8
Operating frequency			
	Operational frequency min	Hz	25
	Operational frequency max	Hz	400
Conventional free air thermal current Ith		A	115
Operating current			
	Operational current AC3 (≤440V ≤55°C)	A	80
	Operational current AC4 (400V)	A	38
Short-time allowable current for 10s (IEC/EN60947-1)		A	640
Protection fuse			
	gG (IEC)	A	125
	aM (IEC)	A	80
Making capacity (RMS value)		A	800
Breaking capacity at voltage			
	Breaking capacity 440V	A	640
	Breaking capacity 500V	A	625
	Breaking capacity 690V	A	456
Resistance per pole (average value)		mΩ	0.6
Power dissipation per pole (average value)			
	Power dissipation pole (average value) Ith	W	7.9
	AC3	W	3.8
Tightening torque for terminals			
	min	Nm	4
	max	Nm	5
	min	lbft	2.95
	max	lbft	3.69
Tightening torque for coil terminal			
	min	Nm	0.8
	max	Nm	1
	min	lbft	0.59
	max	lbft	0.74
max number of wires simultaneously connectable		nr.	2
Conductor section			
AWG			
	min		18
	max		2
Flexible w/o lug conductor section			
	min	mm²	1.5
	max	mm²	35
Power terminal protection according to IEC/EN 60529			IP20

The characteristics described in this document are subject to updates or modifications at any time. The descriptions, technical and functional information, illustrations and instructions in this brochure are purely illustrative, and are consequently not contractually binding

BF80T4A024

FOUR-POLE CONTACTOR, IEC OPERATING CURRENT ITH (AC1) = 115A, AC COIL 50/60HZ, 24VAC

Ambient conditions				
Temperature				
	Operating temperature			
		min	°C	-50
		max	°C	70
	Storage temperature			
		min	°C	-60
		max	°C	80
Max altitude			m	3,000
Operating position				
		normal		Vertical plan
		allowable		±30°
Mounting				Screw / DIN rail 35mm
Weight			g	1
Operations				
Mechanical life			Cycles	15,000,000
Electrical life			Cycles	1300000
Safety related data				
Mirror contats according to IEC/EN 609474-4-1				Yes
EMC compatibility				Yes
AC coil operating				
Rated AC voltage at 50/60Hz, 60Hz				
		min	V	12
		max	V	600
AC operating voltage				
	of 50/60Hz coil powered at 50Hz			
	pick-up			
		min	%Us	80
		max	%Us	110
	drop-out			
		min	%Us	20
		max	%Us	55
	of 50/60Hz coil powered at 60Hz			
	pick-up			
		min	%Us	85
		max	%Us	110
	drop-out			
		min	%Us	40
		max	%Us	55
	of 60Hz coil powered at 60Hz			
	pick-up			
		min	%Us	80
		max	%Us	110
	drop-out			
		min	%Us	20
		max	%Us	55
AC operating voltage				
	of 50/60Hz coil powered at 50Hz			
		in-rush	VA	210
		holding	VA	15
	of 50/60Hz coil powered at 60Hz			
		in-rush	VA	195
		holding	VA	13

The characteristics described in this document are subject to updates or modifications at any time. The descriptions, technical and functional information, illustrations and instructions in this brochure are purely illustrative, and are consequently not contractually binding

of 60Hz coil powered at 60Hz				
		in-rush	VA	210
		holding	VA	15
Dissipation at holding ≤20°C 50Hz			W	5
Max cycles frequency				
Mechanical operations			Cycles/h	3,600
Operating times				
Average time for Us control				
in AC				
	Closing NO			
		min	ms	12
		max	ms	28
	Opening NO			
		min	ms	8
		max	ms	22
in DC				
	Closing NO			
		min	ms	40
		max	ms	85
	Opening NO			
		min	ms	20
		max	ms	55
UL technical data				
Full-load current (FLA) for three-phase AC motor				
		at 480V	A	77
		at 600V	A	77
Yielded mechanical performance				
for three-phase AC motor				
		at 200/208V	hp	25
		at 220/230V	hp	30
		at 460/480V	hp	60
		at 575/600V	hp	75
Contact rating of auxiliary contacts according to UL				SI - A600
General USE				
Contactor				
		AC current	A	32
Auxiliary contacts				
		AC voltage	V	600
		AC current	A	10
		DC voltage	V	250
		DC current	A	1
Dimensions				

The characteristics described in this document are subject to updates or modifications at any time. The descriptions, technical and functional information, illustrations and instructions in this brochure are purely illustrative, and are consequently not contractually binding

BF80T4A024

FOUR-POLE CONTACTOR, IEC OPERATING CURRENT ITH (AC1) = 115A, AC COIL 50/60HZ, 24VAC

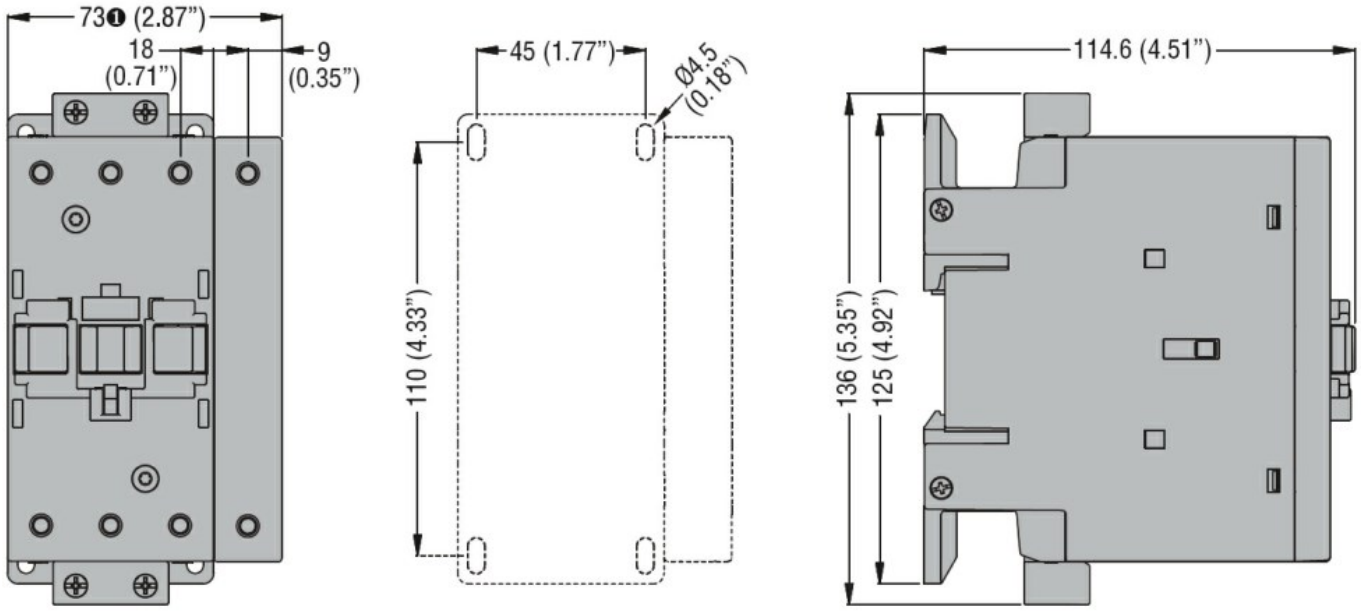

❶ BF80T2 82mm/3.23"

Wiring diagrams

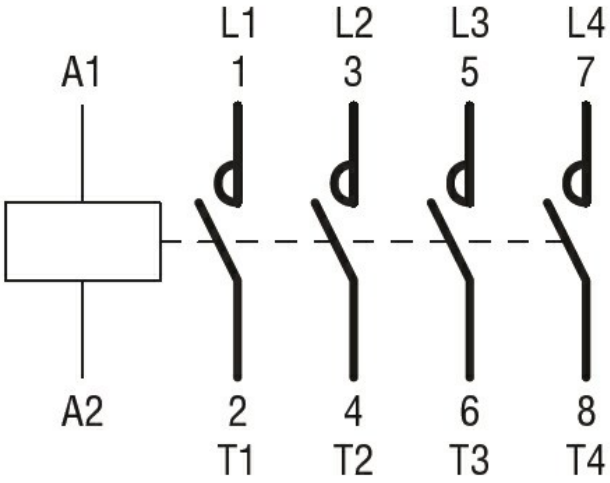

Certifications and compliance

Certifications

CSA C22.2 n° 60947-1
CSA C22.2 n° 60947-4-1
IEC/EN 60947-1
IEC/EN 60947-4-1
UL 60947-1
UL 60947-4-1

Compliance

cULus

ETIM 6 classification

EC000066 - Power contactor, AC switching

The characteristics described in this document are subject to updates or modifications at any time. The descriptions, technical and functional information, illustrations and instructions in this brochure are purely illustrative, and are consequently not contractually binding