E11995

Mounting clamp for position sensors

MOUNTING CLAMP M18

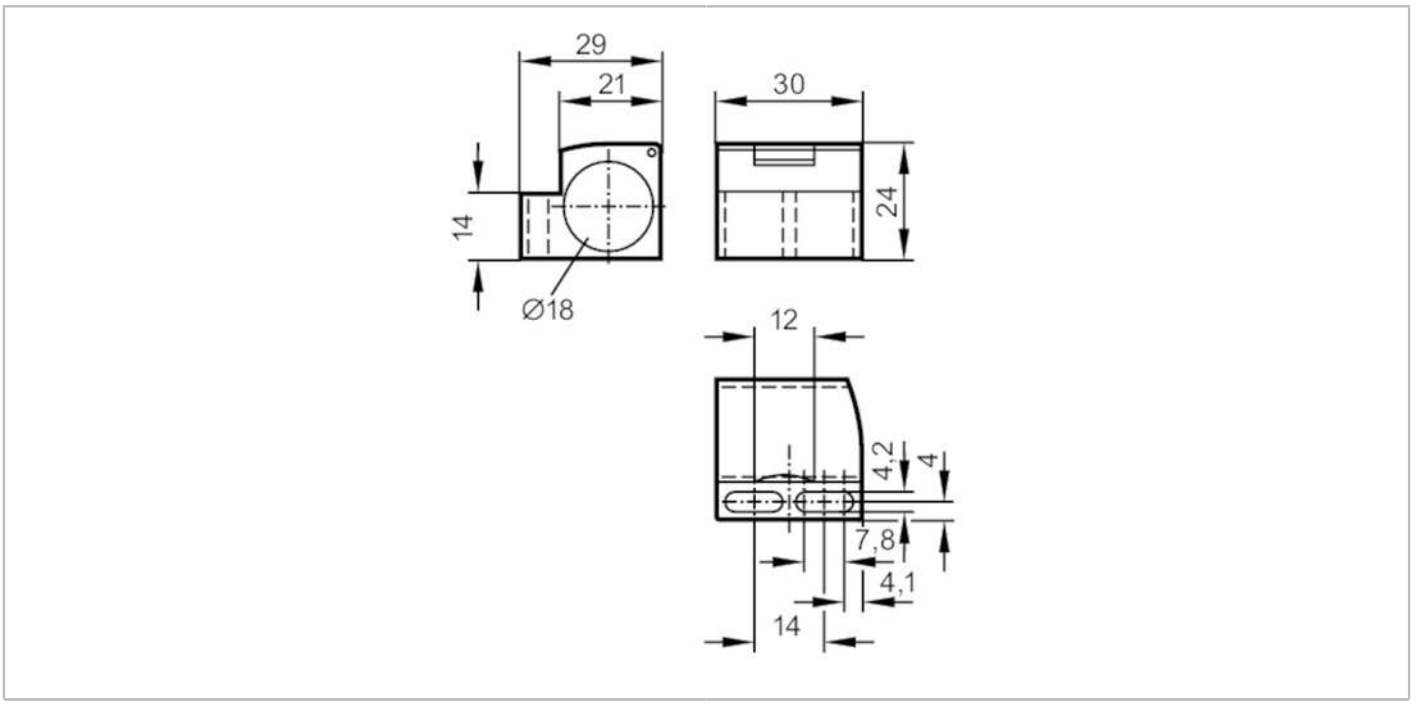

CE

Application		
Design		with end stop
Installation		for sensors with 45° chamfer
Operating conditions		
Ambient temperature	[°C]	-25...85
Mechanical data		
Weight	[g]	12.5
Dimensions	[mm]	24 x 30 x 29
Inside diameter	[mm]	18
Materials		PC
Remarks		
Pack quantity		1 pcs.