trumeter
innovation by design

2600 Series

Cable, Wire and Rope Measuring Machine



Heavy duty, multi-purpose measuring machine which measures the length of cable, wire, rope, hose, extrusions or continuous strip from 6mm (0.24in) to 76mm (3.0in) diameter.

The pivot arm, also available separately (2620), carries the 500mm circumference precision ground measuring wheel. The shaft that supports the measuring wheel revolves in a double ball race which is mounted in the pivot arm. A choice of polyurethane covered or knurled aluminium measuring wheels is available.

The length is indicated on a 3602 counter mounted at the side of the unit.

Key Features

- Measures up to 76mm (3.0in) diameter
- Heavy duty cast aluminum structure with integral mounting flanges
- Totalising counter fitted
- Optional encoder option to pulse electronic counters
- Manual lever reset

Specification

Cable Diameter Range	6mm (0.24in) to 76mm (2.99in)
Measuring Wheel Circumference	500mm
Maximum Speed of Travel	1500 metres/min or 3000 counts/ min whichever is lower
Units of Measurement Available	Metres and centimetres, yards and eighths, or feet and inches
Accuracy	+/- 1%
Counter Type	3602
Packed Dimensions	530mm (21in) x 330mm (13in) x 330mm (13in)
Gross Weight	13.0kg (28.7lb)

trumeter
innovation by design

custom is our passion

Dimensions

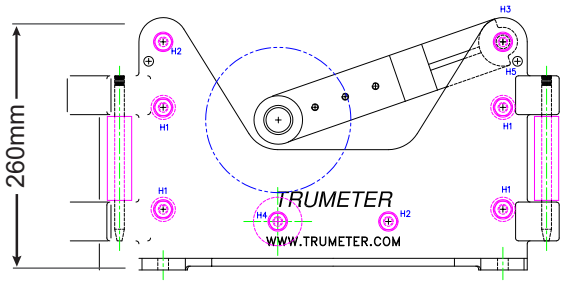

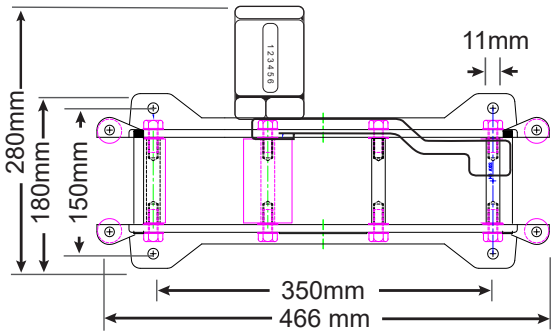

Length Measuring Ordering Information

To order a 2600

1. Select the wheel surface type
2. Select the wheel type
3. Select the unit of measurement
4. Select the direction of travel

2600 - Multi-purpose Measuring Machine

Wheel type (Select and add code to 2600-**???**)

132 for polyurethane covered wheel and mechanical display
332 for knurled aluminium wheel and mechanical display

Unit of measurement (Select and add code to 2600-XXX**?**)

C Metres/Centimetres
F Feet and Inches

Material travel and counter position (Select and add code to 2600-XXXX**?**)

A for material travelling towards the operator; counter on left
B for material travelling away from the operator; counter on left
C for material travelling away from the operator; counter on right
D for material travelling towards the operator; counter on right

e.g. 2600-132CA = Poly wheel displaying in metres/centimetres, material travelling towards the operator with the counter on his left.

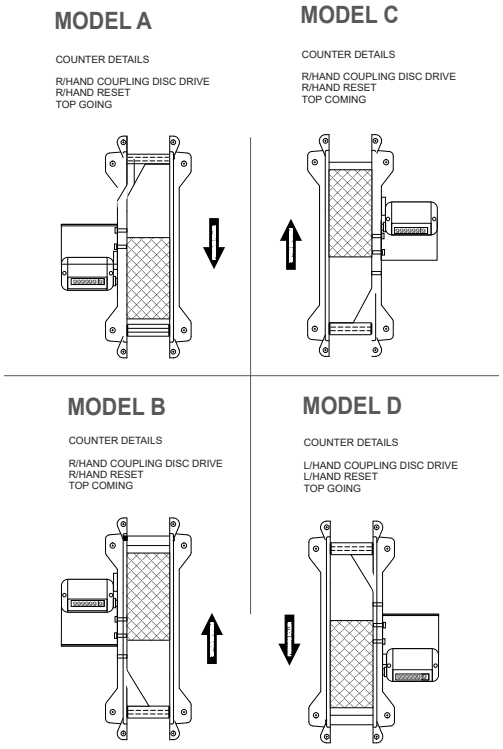

Replacement Parts

3602-021613-611A - replacement counter for 2600-132CA
3602-021613-619A - replacement counter for 2600-132FA
011484-01 - replacement 1/2 meter knurled aluminum wheel
011057-01 - replacement 1/2 meter polyurethane wheel



www.trumeter.com

Trumeter (Europe)
Pilot Mill
Alfred Street
Bury,
BL9 9JR
Tel: +44 161 674 0960
Email: sales.uk@trumeter.com

Trumeter (The Americas)
6601 Lyons Rd, Suite H-7,
Coconut Creek, Florida,
FL 33073
USA
Tel: +1 954 725 6699
Email: sales.usa@trumeter.com

Innovative Design Technologies Sdn. Bhd
Lot 5881, Lorong Iks Bukit Minyak 1
Taman Perindustrian Iks, 14000 Bukit Tengah
Penang, Malaysia
Web: www.idtworld.com
Tel: + 604 5015700
Email: sales.my@idtworld.com