PN3092
PN-100-SER14-MFRKG/US/ /V

Pressure sensors

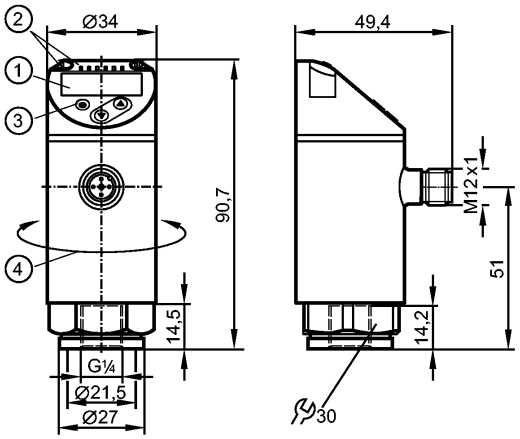


1: 4-digit alphanumeric display / alternating indication of red and green
2: LEDs (display unit / switching status)
3: Programming button
4: Upper part of the housing can be rotated by 345°

| Product characteristics |
|---|
| Electronic pressure sensor |
| M12 connector |
| Function programmable |
| Measuring element: ceramic-capacitive pressure measuring cell |
| Process connection: G ¼ I / M6 I |
| 2 outputs<br>OUT1 = switching output<br>OUT2 = analogue output |
| 4-digit alphanumeric display / alternating indication of red and green |
| Measuring range: 0...100 bar / 0...1450 psi / 0...10 MPa |

| Application | | | | |
|---|---|---|---|---|
| Application | | Type of pressure: relative pressure<br>Group 2 fluids according to the Pressure Equipment Directive (PED), group 1 fluids on request | | |
| Pressure rating | | 300 bar | 4350 psi | 30 MPa |
| Bursting pressure min. | | 650 bar | 9400 psi | 65 MPa |
| Vacuum resistance | [mbar] | -1000 | | |
| Medium temperature | [°C] | -25...80 | | |

| Electrical data | | |
|---|---|---|
| Electrical design | | DC PNP |
| Operating voltage | [V] | 18...30 DC [1]) |
| Current consumption | [mA] | < 35 |
| Insulation resistance | [MΩ] | > 100 (500 V DC) |
| Protection class | | III |
| Reverse polarity protection | | yes |

| Outputs | | |
|---|---|---|
| Output | | 2 outputs<br>OUT1 = switching output<br>OUT2 = analogue output |
| Output function | | normally open / closed programmable; 4...20 mA or 0...10 V |
| Current rating | [mA] | 150; 200 (...60 °C); 250 (...40 °C) |
| Voltage drop | [V] | < 2.5 |
| Short-circuit protection | | pulsed |
| Overload protection | | yes |

# PN3092 - Electronic pressure sensor - eclass: 27201302 / 27-20-13-02

| | | | | |
|---|---|---|---|---|
| Switching frequency | [Hz] | ≤ 170 | | |
| Analogue output | | 4...20 mA; 0...10 V | | |
| Max. load | [Ω] | 4...20 mA: max. 500 | | |
| Min. load resistance | [Ω] | 0...10 V: min. 2000 | | |
| Measuring / setting range | | | | |
| Measuring range | | 0...100 bar | 0...1450 psi | 0...10 MPa |
| Setting range | | | | |
| Set point, SP | | 1...100 bar | 10...1450 psi | 0.1...10 MPa |
| Reset point, rP | | 0.5...99.5 bar | 5...1445 psi | 0.05...9.95 MPa |
| in steps of | | 0.5 bar | 5 psi | 0.05 MPa |
| Accuracy / deviations | | | | |
| Accuracy / deviations (in % of the span) | | | | |
| Switch point accuracy | | < ± 0.5 | | |
| Characteristics deviation *) | | < ± 0.25 (BFSL) / < ± 0.5 (LS) | | |
| Hysteresis | | < ± 0.25 | | |
| Repeatability **) | | < ± 0.1 | | |
| Long-term stability ***) | | < ± 0.05 | | |
| Temperature coefficients (TEMPCO) in the temperature range -25...80° C (in % of the span per 10 K) | | | | |
| Greatest TEMPCO of the zero point | | 0.2 | | |
| Greatest TEMPCO of the span | | 0.2 | | |
| Reaction times | | | | |
| Power-on delay time | [s] | 0.3 | | |
| Min. response time switching output | [ms] | < 3 | | |
| Delay time programmable dS, dr | [s] | 0...50 | | |
| Damping for the switching output (dAP) | [s] | 0...4 | | |
| Damping for the analogue output (dAA) | [s] | 0...4 | | |
| Response time analogue output | [ms] | < 3 | | |
| Integrated watchdog | | yes | | |
| Software / programming | | | | |
| Programming options | | hysteresis / window function; NO / NC; on delay, off delay; damping; display unit; current/ voltage output | | |
| Interfaces | | | | |
| IO-Link device | | | | |
| Transfer type | | COM2 | | |
| IO-Link revision | | 1.1 | | |
| SDCI standard | | IEC 61131-9 | | |
| IO-Link device ID | | 429 d / 00 01 ad h | | |
| Profiles | | Smart Sensor: Process Data Variable; Device Identification, Device Diagnosis | | |
| SIO mode | | yes | | |
| Required master port class | | A | | |
| Process data analogue | | 1 | | |
| Process data binary | | 1 | | |
| Min. process cycle time | [ms] | 2.3 | | |
| Environment | | | | |
| Ambient temperature | [°C] | -25...80 | | |
| Storage temperature | [°C] | -40...100 | | |
| Protection | | IP 65 / IP 67 | | |
| Tests / approvals | | | | |
| Pressure equipment directive | | Sound engineering practice | | |
| EMC | | DIN EN 61000-6-2<br>DIN EN 61000-6-3 | | |
| Shock resistance | | DIN EN 60068-2-27 | 50 g (11 ms) | |
| Vibration resistance | | DIN EN 60068-2-6 | 20 g (10...2000 Hz) | |
| MTTF | [Years] | 187 | | |

# PN3092 - Electronic pressure sensor - eclass: 27201302 / 27-20-13-02

| | | |
|---|---|---|
| UL approval number | | J005 |
| **Mechanical data** | | |
| Process connection | | G ¼ I / M6 I |
| Materials (wetted parts) | | 1.4404; (V4A / 316L); Al2O3 (ceramics); FKM |
| Housing materials | | 1.4404 (V4A / 316L); PBT+PC-GF 30; PBT-GF 20; PC |
| Min. pressure cycles | | 100 million |
| Tightening torque | [Nm] | 25...35 (recommended tightening torque²) |
| Restrictor element integrated | | no (can be retrofitted) |
| Weight | [kg] | 0.272 |
| **Displays / operating elements** | | |
| Display | | Display unit 3 x LED green (bar, psi, MPa)<br>Switching status 1 x LED yellow<br>4-digit alphanumeric display / alternating indication<br>Measured values of red and green |
| **Electrical connection** | | |
| Connection | | M12 connector; Gold-plated contacts |

**Wiring**

Core colours

BK black
BN brown
BU blue
WH white




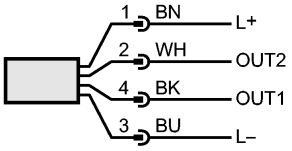


OUT1: switching output or IO-Link
OUT2: 4...20 mA / 0...10 V
Colours to DIN EN 60947-5-2

**Remarks**

Remarks

*) BFSL = Best Fit Straight Line / LS = Limit Value Setting
**) with temperature fluctuations < 10 K
***) in% of the span / 6 months
¹) to EN50178, SELV, PELV
²) Depends on lubrication, seal and pressure rating

| | | |
|---|---|---|
| Pack quantity | [piece] | 1 |