

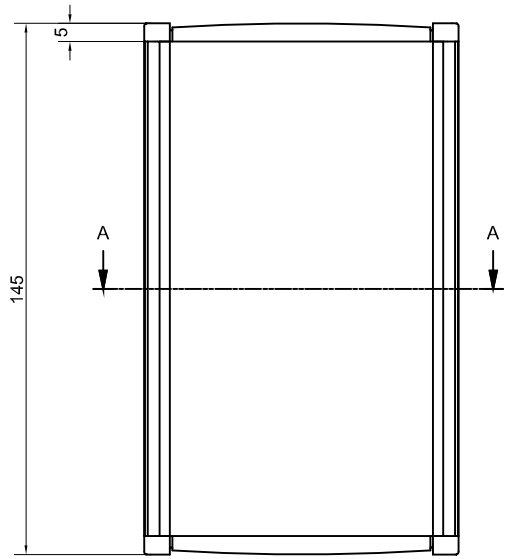

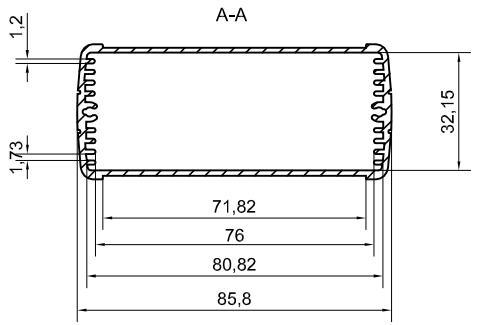

MAXIMUM PCB SIZE

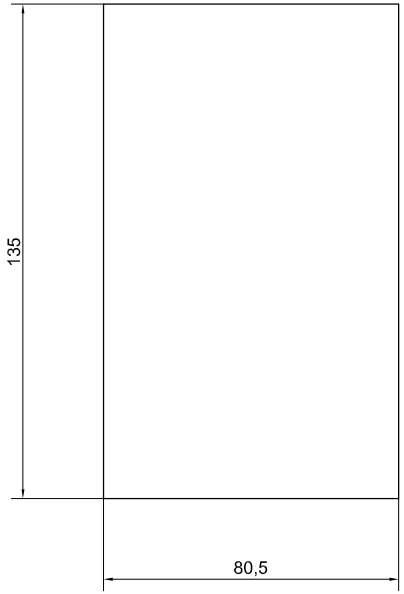

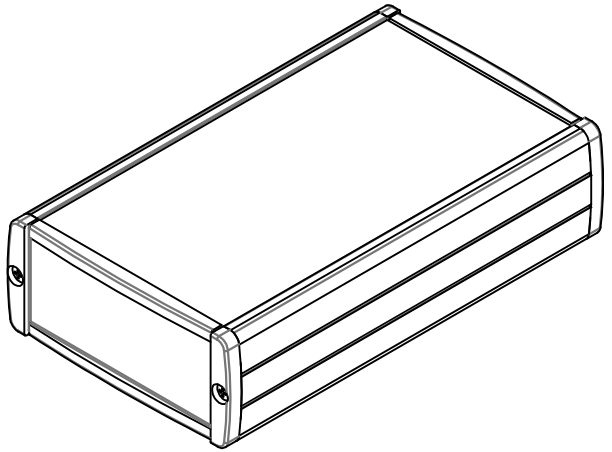

TEKO ENCLOSURES	Denomination: Assembly TEKAL 22	Part. Number: TEKAL-22
	Subject to technical modification without prior notice, Tipographical and other errors do not justify any claim for damages. All dimensions should be verified using an actual moulded part.	Rev. Index: / Scale: 1:1
	This document contains proprietary information of **TEKO S.p.a.** and is tendered subject to the conditions that the information be retained in confidence not be reproducer or copied and not be used or incorporated in any product.	Date: 27/04/2005 / Format design: A2