ID5075

Inductive sensor

IDC3050BANKG/US

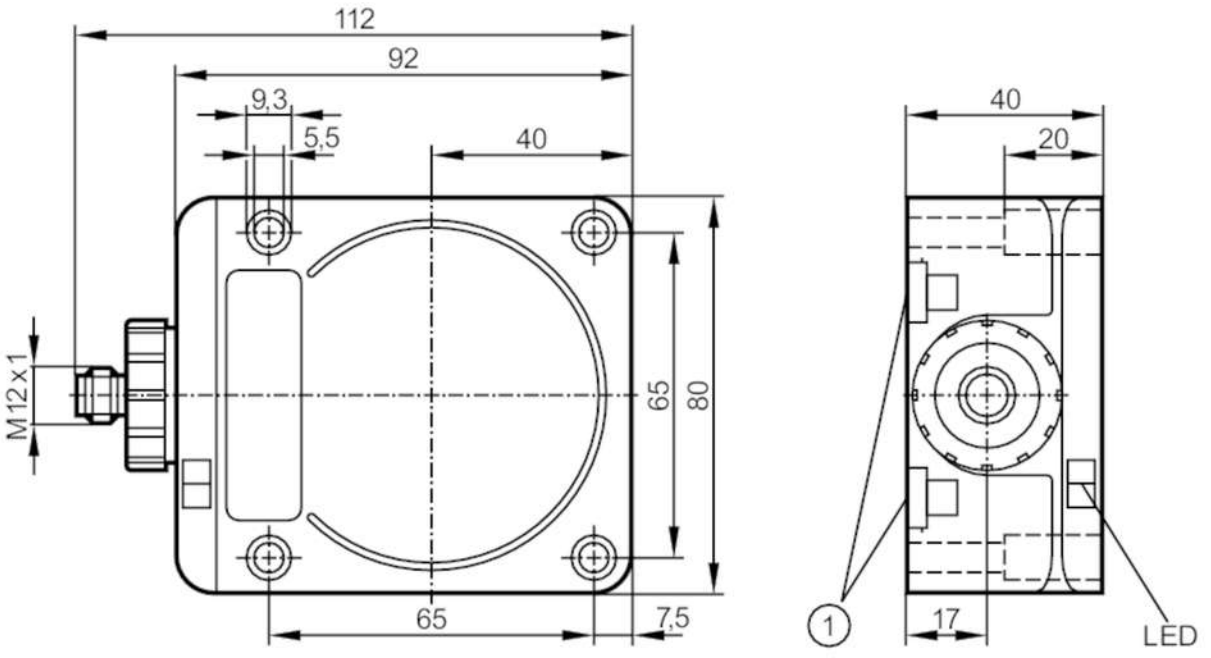

1 mounting on DIN rail

Product characteristics		
Electrical design		NPN
Output function		normally open
Sensing range	[mm]	50
Housing		rectangular
Dimensions	[mm]	92 x 80 x 40
Electrical data		
Operating voltage	[V]	10...36 DC
Current consumption	[mA]	15; (24 V)
Protection class		II
Reverse polarity protection		yes
Outputs		
Electrical design		NPN
Output function		normally open
Max. voltage drop switching output DC	[V]	2.5
Permanent current rating of switching output DC	[mA]	200
Switching frequency DC	[Hz]	4
Short-circuit protection		yes
Type of short-circuit protection		pulsed
Overload protection		yes
Detection zone		
Sensing range	[mm]	50

ID5075

Inductive sensor

IDC3050BANKG/US

Operating distance	[mm]	0...40.5; (mounted flush with mild steel (ST37))	
Accuracy / deviations			
Correction factor		steel: 1 / stainless steel: 0.7 / brass: 0.4 / aluminium: 0.3 / copper: 0.2	
Hysteresis	[% of Sr]	1...15	
Switch point drift	[% of Sr]	-10...10	
Operating conditions			
Ambient temperature	[°C]	-25...80	
Protection		IP 67	
Tests / approvals			
EMC		EN 60947-5-2	
		EN 55011	
MTTF	[years]	2225	
Mechanical data			
Weight	[g]	418	
Housing		rectangular	
Mounting		flush mountable	
Type of mounting		rail; (TH35 (EN 60715))	
Dimensions	[mm]	92 x 80 x 40	
Materials		PPE; diecast zinc nickel-plated	
Displays / operating elements			
Display		switching status	1 x LED, yellow
		operation	1 x LED, green
Accessories			
Items supplied		sealing plug: 1	
Remarks			
Pack quantity		1 pcs.	
Electrical connection - plug			

Connector: 1 x M12; coding: A



ID5075

Inductive sensor

IDC3050BANKG/US

Connection

