Foot-switch
Series F3 UN

Description **F3-U1Z/U1Z/U1Z UN**	Article number **6063611026**

Operating symbol left

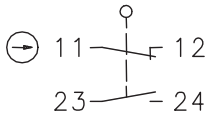

Operating symbol middle

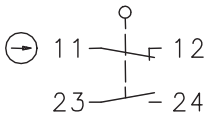

Operating symbol right

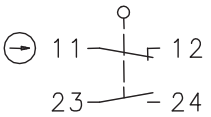

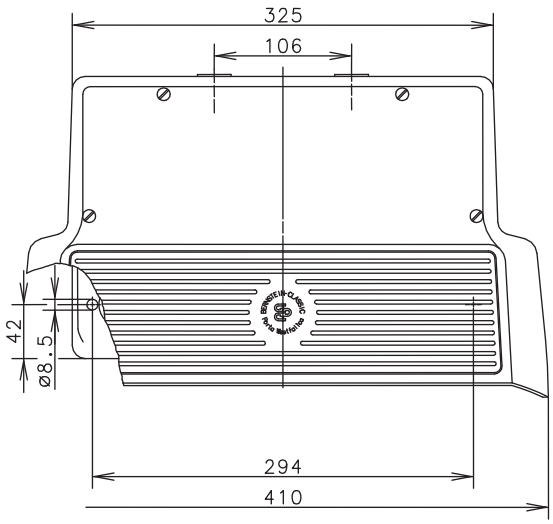

Electrical Data		
Rated insulation voltage	U_i	400 V AC
Conv. thermal current	I_{the}	10 A
Rated operational voltage	U_e	240 V
Utilization category		AC-15, Ue 240 V /Ie 3 A (pedal stop)
Direct opening action	⊖	acc. to IEC/EN 60947-5-1, annex K
Short-circuit protective device		Fuse 10 A gG
Protection class		I

Technical modifications and errors excepted.
The technical datasheet corresponds to the technical state as of 2015-07-30 and will not be removed in case of changes.

Mechanical data	
Enclosure	AL
Protective guard (Accident protection cover UN)	AL
Actuator	Foot lever (PA)
Ambient air temperature	-30° C ... +80° C
Contact type	3 NC, 3 NO (Zb)
Operating force	≈ 10 N (pedal centre)
Mechanical life	10 x 10^6 operating cycles
Switching frequency	max. 50 / min
Assembly	2 x M8
Connection	screw terminals (M3,5)
Number of connections	12
Protection ground	2 x M4
Conductor cross-sections	Solid: 0,5 ... 1,5 mm^2 or
	Litz wire with ferrules: 0,5 ... 1,5 mm^2
Cable entrance	2 x M20 x 1,5
Weight	≈ 5,4 kg
Protection type	IP65 acc. to IEC/EN 60529

ID for safety engineering	
B10d	20 x 10^6 switching cycles

Standards	
	VDE 0660 T100, DIN EN 60947-1, IEC 60947-1
	VDE 0660 T200, DIN EN 60947-5-1, IEC 60947-5-1
	DIN EN ISO 13849-1

EU Conformity	
	acc. to directive 2006/42/EC

Approvals	
	DGUV
	$_cCSA_{US}$ A300, Q300 (same polarity)
	CCC

Notes
Tapped holes not in use must be closed with blind plugs. The degree of protection (IP code) specified applies only to a properly closed protective guard and in connection with the appropriate cable glands or blind plugs.