6202-2RSL

SKF Explorer

Dimensions

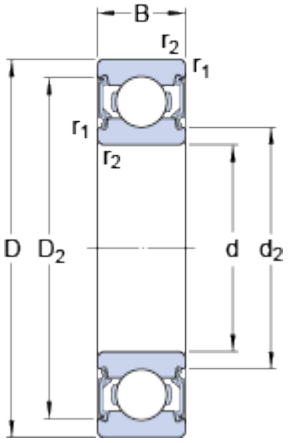

d		15	mm
D		35	mm
B		11	mm
d_2		18.6	mm
D_2		30.35	mm
$r_{1,2}$	min.	0.6	mm

Abutment dimensions

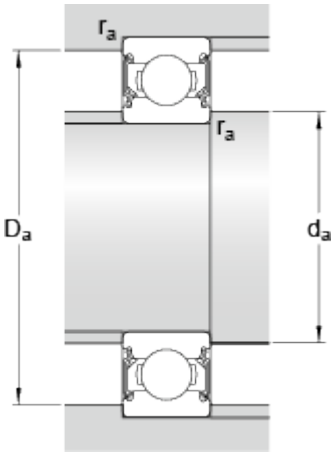

d_a	min.	19.2	mm
d_a	max.	19.4	mm
D_a	max.	30.8	mm
r_a	max.	0.6	mm

Calculation data

Basic dynamic load rating	C	8.1	kN
Basic static load rating	C_0	3.8	kN
Fatigue load limit	P_u	0.16	kN
Reference speed		43000	r/min
Limiting speed		22000	r/min
Calculation factor	k_r	0.025	
Calculation factor	f_0	13	

Mass

Mass bearing	0.0462	kg