Product Data Sheet

9291708002
VWC0040YUDBS
414

ebmpapst
The engineer's choice



GREEN TECH

414

INDEX

1 General 3
2 Mechanics 3
2.1 General 3
2.2 Connections 3
3 Operating Data 4
3.1 Electrical Operating Data 4
3.2 Electrical Features 5
3.3 Aerodynamics 6
3.4 Sound Data 7
4 Environment 7
4.1 General 7
4.2 Climatic Requirements 7
4.3 EMC 7
5 Safety 8
5.1 Electrical Safety 8
5.2 Approval Tests 8
6 Reliability 8
6.1 General 8

1 General

Fan type	Fan	
Rotating direction looking at rotor	Counterclockwise	
Airflow direction	Air outlet over struts	
Bearing system	Sleeve bearing	
Mounting position - shaft	Any	

2 Mechanics

2.1 General

Width	40,0 mm	
Height	40,0 mm	
Depth	20,0 mm	
Mass	0,027 kg	
Housing material	Plastic	
Impeller material	Plastic	
Max. torque when mounted across both mounting flanges Screw size	Wire outlet corner: 80 Ncm Remaining corners: 90 Ncm ISO 4762 - M4 degreased, without an additional brace and without washer	

2.2 Connections

Electrical connection	Wires	
Lead wire length Tolerance	L = 310 mm +- 10 mm	
Wire size (AWG)	28	
Insulation diameter	1,35 mm	

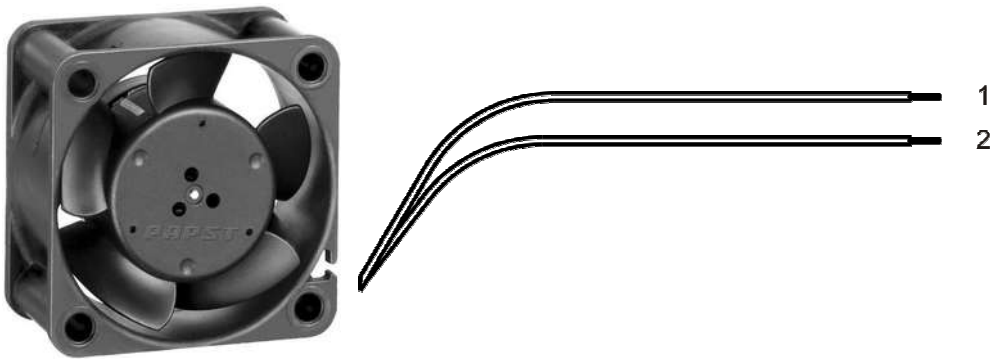

Wire	Color	Operation	Wire size	Insulation diameter
1	red	+ UB	AWG 28	1,35 mm
2	blue	- GND	AWG 28	1,35 mm

3 Operating Data

3.1 Electrical Operating Data

Measurement conditions: Normal air density = 1,2 kg/m3; Temperature 23℃ +/ - 3℃; Motor axis horizontal; warm-up time before measuring 5 minutes (unless otherwise specified). In the intake and outlet area should not be any solid obstruction within 0,5 m.

Δp = 0: corresp. to free air flow (see chapter aerodynamics)
I: corresp. to arithm. mean current value

Features	Condition	Symbol	Values		
Voltage range		U	20 V		28 V
Nominal voltage		U_N		24 V	
Power consumption Tolerance	Δp = 0 0010	P	0,7 W +- 17,5 %	1 W +- 12,5 %	1,2 W +- 17,5 %
Current consumption Tolerance	Δp = 0 0010	I	33 mA +- 17,5 %	42 mA +- 12,5 %	43 mA +- 17,5 %
Speed Tolerance	Δp = 0 0010	n	5.200 1/min +- 15 %	6.000 1/min +- 10 %	6.700 1/min +- 15 %
Starting current consumption				68 mA	

3.2 Electrical Features

Electronic function	None	
Reversed polarity protection Max. residual current at U_N	Rectifying diode I_F <= 30 nA	
Locked rotor protection	Impedance protected	
Locked rotor current at U_N	I_{block}	

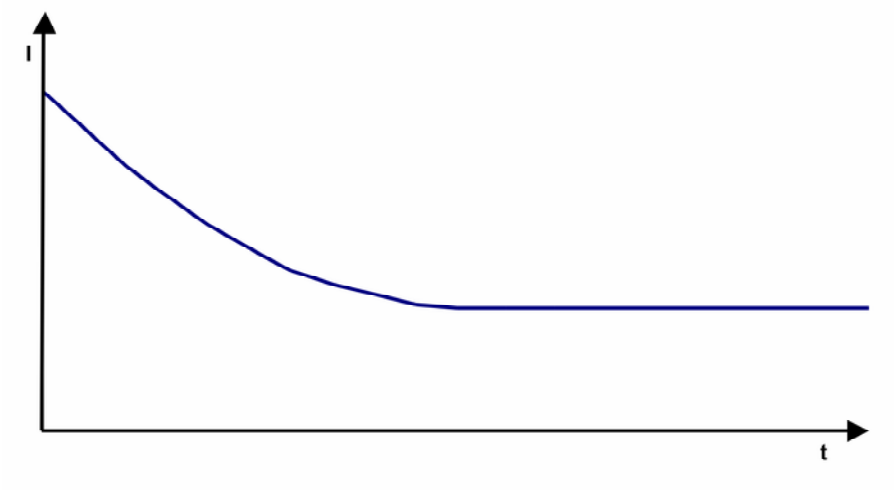

3.3 Aerodynamics

Measurement conditions:	Measured with a double chamber intake rig. Normal air density = 1,2 kg/m3; Temperature 23℃ +/ - 3℃; In the intake and outlet area should not be any solid obstruction within 0,5 m. Motor shaft horizontal. The information is only valid under the specified test conditions and may be changed by the installation conditions. If there are deviations from the standard test conditions, the characteristic values must be checked under the installed conditions.

a.) Operation condition:

6.000 1/min at free air flow

Max. free-air flow (Δp = 0 / V̇ = max.)	10,0 m3/h	
Max. static pressure (Δp = max. / V̇ =0)	41 Pa	

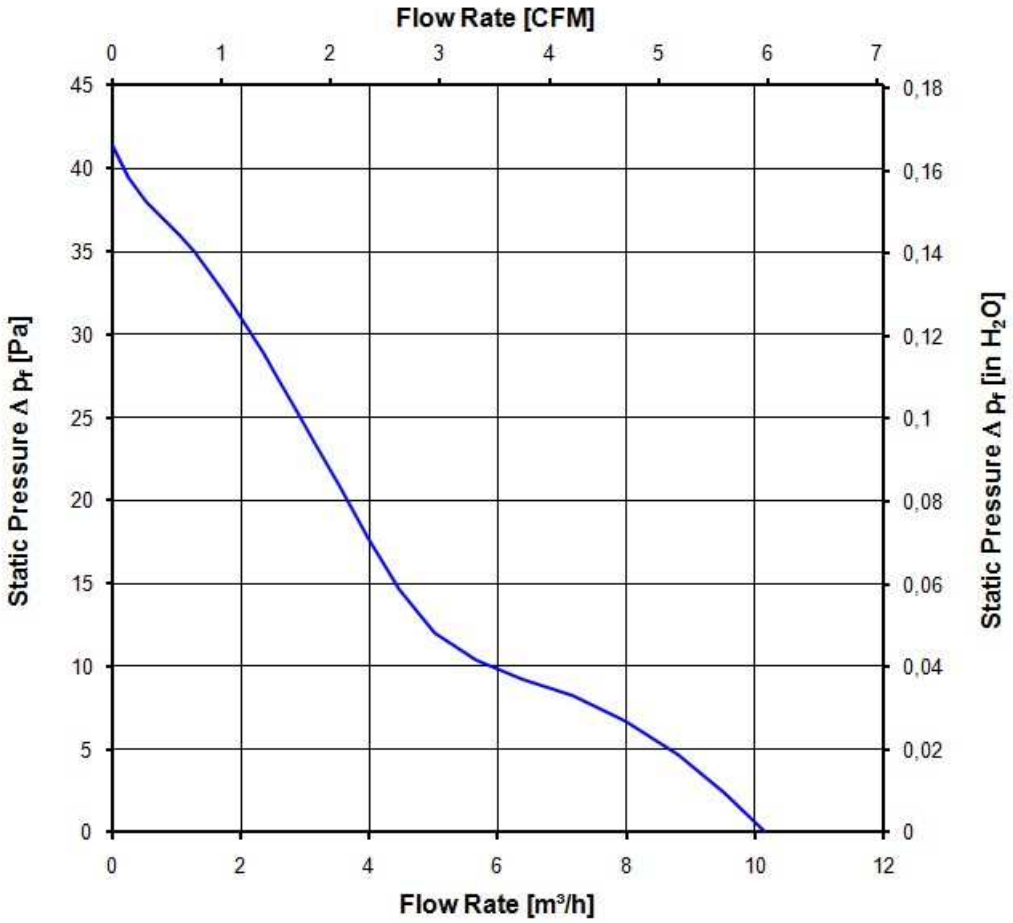

3.4 Sound Data

Measurement conditions:	Sound pressure level: 1 meter distance between microphone and the air intake. Sound power level: Acc. to DIN 45635 part 38 (ISO 10302) Measured in a semianchoic chamber with a background noise level of Lp(A) < 5 dB(A) For further measurement conditions see chapter aerodynamics.

a.) Operation condition:

6.000 1/min at free air flow

Optimal operating point	9,0 m3/h @ 5 Pa	
Sound power level at the optimal operating point	4,1 bel(A)	
Sound pressure level at free air flow, measured in rubber bands	20,0 dB(A)	

4 Environment

4.1 General

Min. permitted ambient temperature TU min.	-20 ℃	
Max. permitted ambient temperature TU max.	70 ℃	
Min. permitted storage temperature TL min.	-40 ℃	
Max. permitted storage temperature TL max.	80 ℃	

4.2 Climatic Requirements

Humidity requirements	humid heat, constant; according to DIN EN 60068-2-78, 14 days	
Water exposure	None	
Dust requirements	None	
Salt fog requirements	None	

Permitted application area:
The product is intended for use in sheltered rooms with controlled temperature and controlled humidity. Directly exposure to water must be avoided.

Pollution degree 1 (according DIN EN 60664-1)
There is either no pollution or it occurs only dry, non-conductive pollution. The pollution has no negative impact.

Please require severity levels and specification parameters from the responsible development departments.

4.3 EMC

Kind	**Radiated Emission; 30 MHz - 1000 MHz**
According	DIN EN 55032:2016-02
Ceck accuracy / Limit	Class B
Result	Below limit Class B

5 Safety

5.1 Electrical Safety

Dielectric strength DIN EN 60950 (VDE 0805) and DIN EN 60335 (VDE 0700) A.) Type test Measuring conditions: After 48h of storage at 95% R.H. and 25℃. No arcing or breakdown is allowed! All connections together to ground. B.) Routine test Measuring conditions: At indoor climate. No arcing or breakdown is allowed! All connections together to ground.	Not applicable Not applicable	
Isolation resistance Measuring conditions: After 48h of storage at 95% R.H. and 25℃ measured with U=500 VDC for 1 min.	RI > 10 MOhm	
Clearance / creepage distance	1,0 mm / 1,2 mm	
Protection class	III	

5.2 Approval Tests

CE	EC Declaration of Conformity	Yes
EAC	Eurasian Conformity	Yes
UL	Underwriters Laboratories	Yes / UL507, Electric Fans E38324
VDE	Association for Electrical, Electronic and Information Technologies	Yes / Approval acc. to EN 60950 (VDE 0805) - Information technology equipment
CSA	Canadian Standards Association	Yes / C22.2 No. 113 Fans and Ventilators
CCC	China Compulsory Certification	Not applicable

6 Reliability

6.1 General

Life expectancy L10 at TU = 20 ℃	50.000 h	
Life expectancy L10 at TU = 40 ℃	32.500 h	
Life expectancy L10 at TU = 60 ℃	20.000 h	
Life expectancy L10 at TU max.	15.000 h	
Life expectancy L10 acc. to IPC 9591 at TU = 40 ℃	52.5 00 h	

Copying of this document, and giving it to others and the use or communication of the contents thereof, are forbidden without express authority. Offenders are liable to the payment of damages. All rights are reserved in the event of the grant of a patent or the registration of a utility model or design.

Schutzvermerk nach DIN ISO 16016 beachten/
Refer to protection notice DIN ISO 16016!

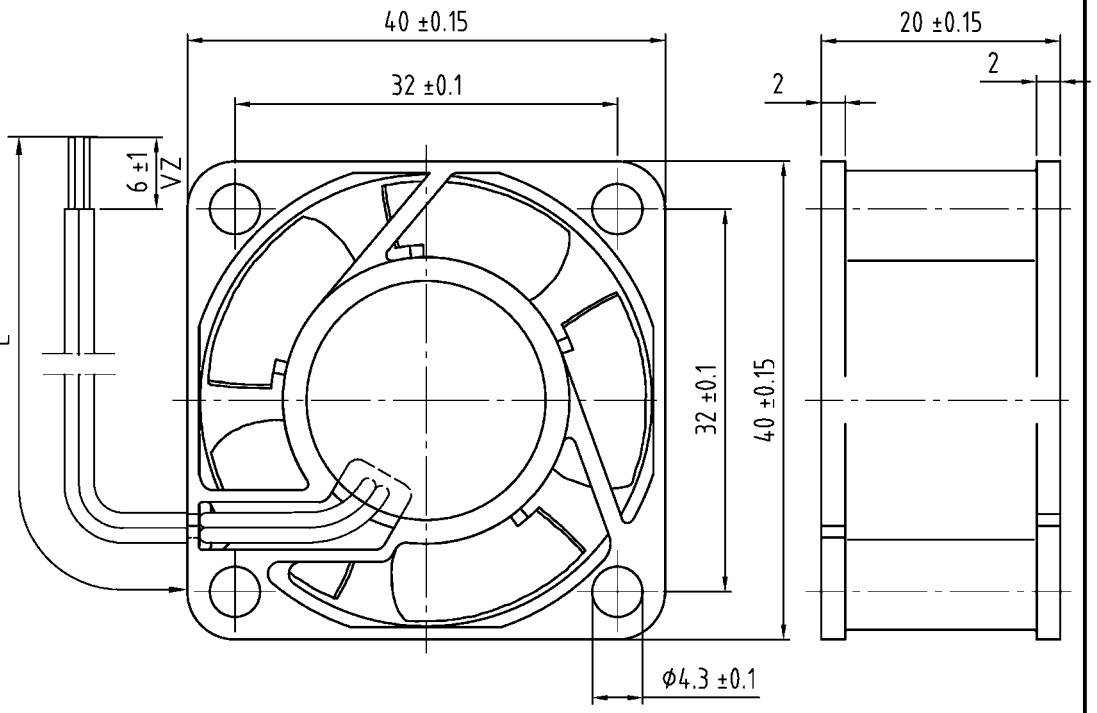

① Anzahl und Länge der Litzen siehe Spezifikationsdaten
length and number of wires see design specification

1:1

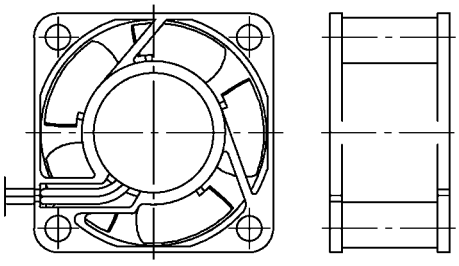

UV = unverzinnt / not tin plated
VZ = verzinnt / tin plated
AV = angeschnitten u. vorgezogen / truncated and pulled

			ebmpapst	Werkstoff/Material:	Volumen/Volume (mm³):
SAP-Status/State	Aend.-Nr./Change-No.	AutoCAD-System-Version	CAD-Umgebung/ CAD-Enviroment		Gewicht/Mass (g):
		Datum/Date	Name/Name		
		Bearb./ Drawn		Artikel/Title	
Tolerierung/Tolerances:		Gepr./ Checked			
Allgemeintoleranzen/Gen. tolerances:		Freig./ Releas.			
		ebmpapst		Zchg.-Nr./ Drawing.-No.:	Ers.f.Zchg./ Replaces:
		ebm-papst St. Georgen GmbH & Co. KG		Dokumenttyp/Type of Document / Teildokument (Blatt/Page) / Index/Index / Format/Size: / Massstab/scale	

11/09