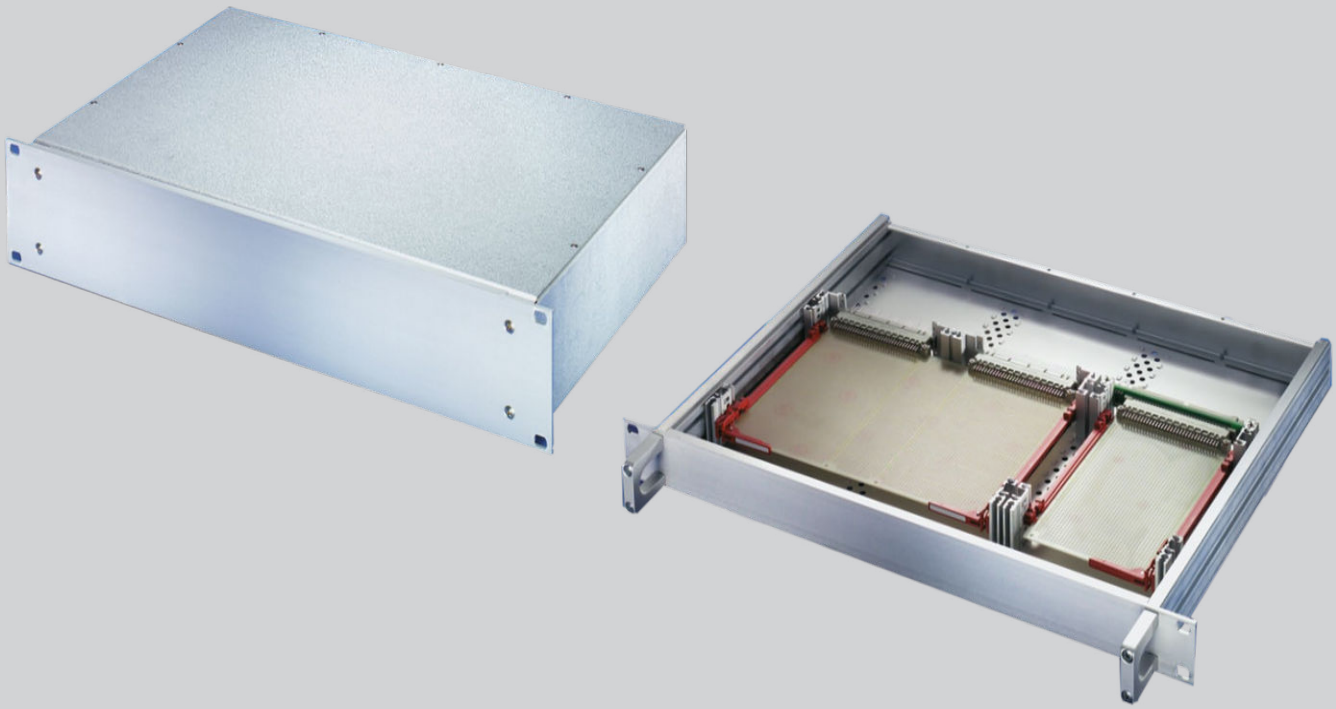

CONNECT AND PROTECT

MultipacPRO

01/2024

nVent SCHROFF

OVERVIEW

MAIN KATALOG

Cabinets 1

Wall mounted cases 2

Accessories for cabinets and wall mounted cases . . 3

Climate control . . 4

Electronics cases 5

Subracks/ 19" chassis 6

Front panels, plug-in units 7

Systems 8

Power supply units 9

Backplanes 10

Connectors, front panel component system 11

Appendix 12

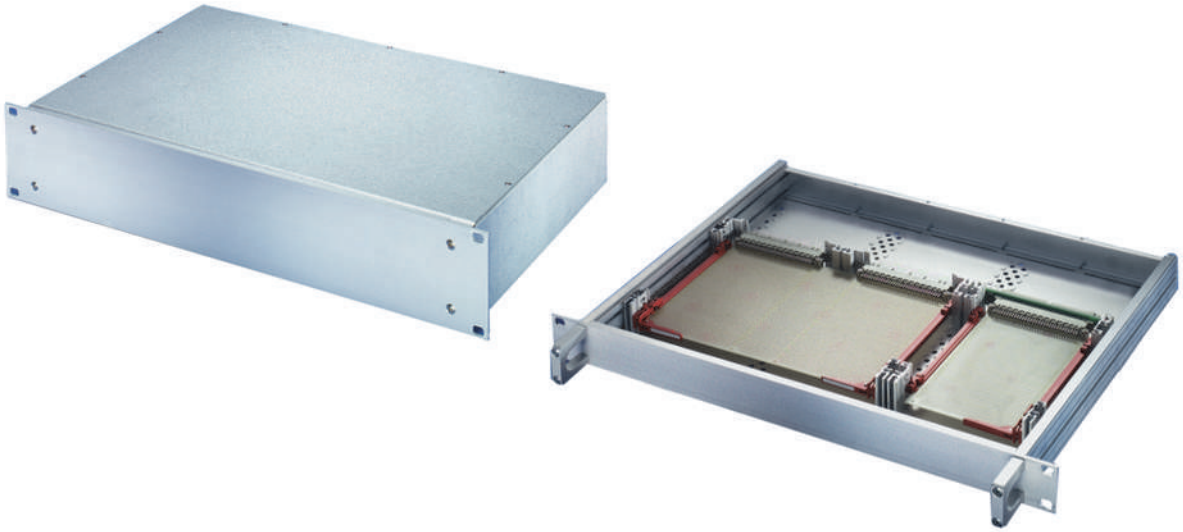

06005001

STANDARDS/CERTIFICATIONS

- Exterior dimensions in accordance with: IEC 60297-3-100, 101, 105
- Ingress protection IP 20 in accordance with IEC 60529
- EMC testing in accordance with VG 95373 part 15 or IEC 61587



06008009

Handles can be bolted on from front



06008010

High stability with aluminium profile side panel



138303624

Mounting plate for fitting heavy components

Top cover and base plate in 3 versions



06008003

Plain



06008005

Perforated



06008004

For standardised board mounting

19" chassis – MultipacPRO

OVERVIEW

Overview 6.112

THE IDEAL SOLUTION FOR ELECTRONIC DEVICES IN THE MOST COMPACT DIMENSIONS

- **Aluminium or steel (AlZn coated) designs**
- **For standardised 19" board mounting or for installation of non-standardised components**
- **EMC shielding upgradable**
- **Mounting service and customized machining with ServicePLUS**



06008005

19" COMPLETE CHASSIS

- 2 materials
  - Steel plate (AlZn coated)
  - Aluminium
- 3 top cover versions
  - Top cover/base plate, solid
  - Top cover/base plate, perforated (aluminium version)
  - Top cover/base plate for standardised PCBs (aluminium version)

19" complete chassis (St) 6.114
19" complete chassis (Al) 6.115



06008001

19" CHASSIS, INDIVIDUALLY CONFIGURED FROM SEPARATE PARTS

- For non-standardised assemblies with mounting plate
- For standardised board assembly
- Customised solutions

19" chassis for non-standardised assembly 6.120
19" chassis for standardised assembly 6.122

Accessories
Guide rails 6.124
Telescopic slides 1 U 6.125
Telescopic slides 2 U 6.126

Application examples. 6.127

SERVICEPLUS

e.g. individual configuration and assembly
e.g. modification (cut-outs)
e.g. downloads (CAD drawings, user manuals, test reports)
e.g. custom solutions (special sizes)

19" chassis – MultipacPRO

19" COMPLETE CHASSIS FROM STEEL WITH PLAIN TOP COVER AND BASE PLATE

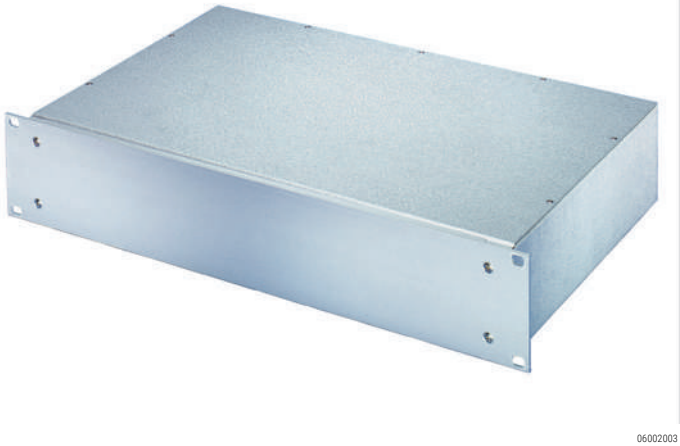

06002003

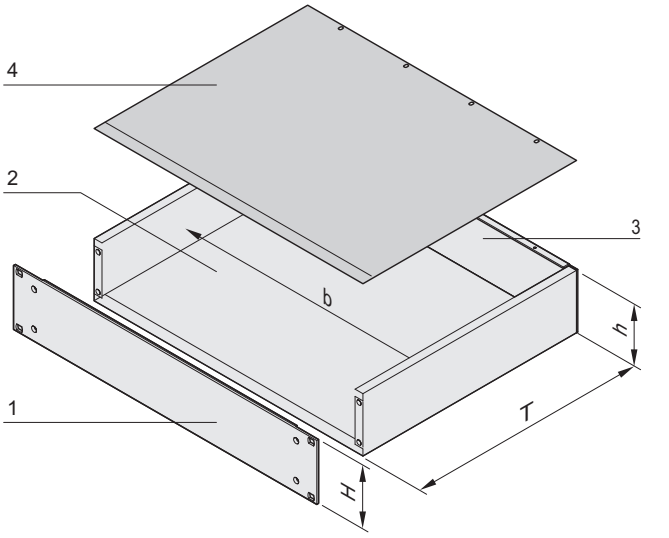

06002051

h = clear height (overall) (H - 3.0 mm)
width = 447 mm

b = clear installation

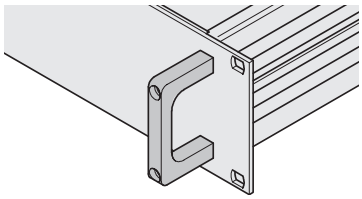

06002052

Front handle

- Complete chassis, St (AlZn coated) with Al extrusion front panel
- Detachable rear panel for easy machining
- EMV shielding approx. 20 dB(A) at 1 GHz without additional shielding; > 40 dB(A) at 1 GHz with optional EMC gasketing
- In accordance with standard IEC 60297-3-101
- In the 1 U version 19" and ATX power supplies can be assembled up to a clearance of 40 mm

DELIVERY COMPRISES (Kit)

Item	Qty	Description
1	1	Front panel, Al extrusion, 3 mm; Visible surface: clear anodized; Surface finsih: clear passivated
2	1	Base body, plain, St, 1 mm, (AlZn coated)
3	1	Rear panel, St, 1 mm (AlZn coated)
4	1	Cover, plain, St, 1 mm (AlZn coated)
5	1	Assembly kit

ORDER INFORMATION

Height U	Height H mm	Depth T mm	Part no.
1	43.7	220	**20860-120**
1	43.7	280	**20860-121**
1	43.7	340	**20860-122**
2	88.1	280	**20860-126**
2	88.1	340	**20860-127**
Accessories			
Front handles incl. assembly kit for 1 U, Al extrusion, anodised, PU 2 pieces			**20860-256**
Front handles incl. assembly kit for 2 U, Al extrusion, anodised, PU 2 pieces			**20860-257**
EMC sealing to close the gap at the front between case and front panel, 2 saw tooth gaskets, stainless steel, PU 1 piece			**20860-132**
Assembly tool, Screw driver Torx20 for M4 screws			**64560-027**

NOTE

- Further versions with steel front panel (pizza box) available on request
- Telescopic slides cannot be used
- No special EMC version available
- Standardised internal mounting kits cannot be used

19" chassis – MultipacPRO

19" COMPLETE CHASSIS FROM ALUMINIUM WITH PLAIN TOP COVER AND BASE PLATE



06008003

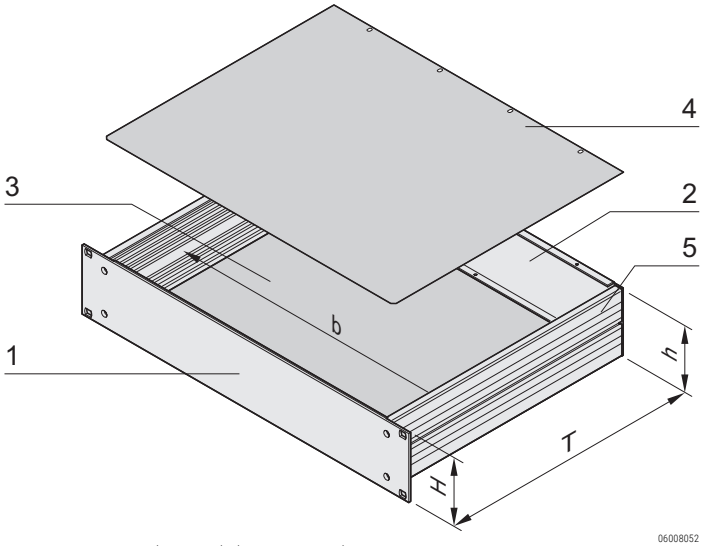

06008052

h = clear height (overall) (H - 8.1 mm)
width = 403 mm

b = clear installation

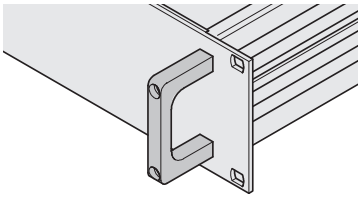

06002052

Front handle

- Complete chassis from aluminium
- Detachable rear panel for easy machining
- EMC shielding of approx. 30 dB(A) at 1 GHz (without additonal shielding material)
- In accordance with standard IEC 60297-3-100, -101, -105
- In the 1 U version 19" and ATX power supplies can be assembled up to a clearance of 35 mm

DELIVERY COMPRISES (Kit)

Item	Qty	Description
1	1	Front panel, Al extrusion, 3 mm; Visible surface: clear anodized; Surface finsih: clear passivated
2	1	Rear panel, Al, 2 mm, surface finish: clear passivated
3	1	Base plate, plain, Al, 1 mm
4	1	Cover plate, plain, Al, 1 mm
5	2	Side panel, Al extrusion, raw; with grooves for threaded insert (2 × 7); 5 U, two-piece, 3+2 U
6	1	Assembly kit

ORDER INFORMATION

Height U	Height H mm	Depth T mm	Part no. Kit
1	43.7	220	**20860-601**
1	43.7	280	**20860-602**
1	43.7	340	**20860-603**
2	88.1	220	**20860-604**
2	88.1	280	**20860-605**
2	88.1	340	**20860-606**
3	132.6	280	**20860-607**
3	132.6	340	**20860-608**
3	132.6	400	**20860-609**
3	132.6	460	**20860-610**
4	177.0	280	**20860-611**
4	177.0	340	**20860-612**
4	177.0	400	**20860-613**
4	177.0	460	**20860-614**
5	221.5	460	**20860-615**
EMC gasketing kit Silicone/nickel gasket 2100 mm for contacting side panel/cover plate; seal, stainless steel, for front panel/cover plate, 1 kit			**20860-130**
Front handles incl. assembly kit for 1 U, Al extrusion, anodised, PU 2 pieces			**20860-256**
Front handles incl. assembly kit for 2 U, Al extrusion, anodised, PU 2 pieces			**20860-257**
Front handles incl. assembly kit for 3 U, Al extrusion, anodised, PU 2 pieces			**20860-258**
Front handles incl. assembly kit for 4 U, Al extrusion, anodised, PU 2 pieces			**20860-259**
Front handles incl. assembly kit for 5 U, Al extrusion, anodised, PU 2 pieces			**20860-260**
Assembly tool, Screw driver Torx20 for M4 screws			**64560-027**

NOTE

- Mounting plate see page 6.118
- Threaded inserts to push into the side panel see page 6.121
- Telescopic slides to mount into cabinet see page 6.125

Part number in bold face type: ready for despatch within 2 working days
Part number in normal type: ready for despatch within 10 working days

19" chassis – MultipacPRO

19" COMPLETE CHASSIS FROM ALUMINIUM WITH PERFORATED TOP COVER AND BASE PLATE



06008005

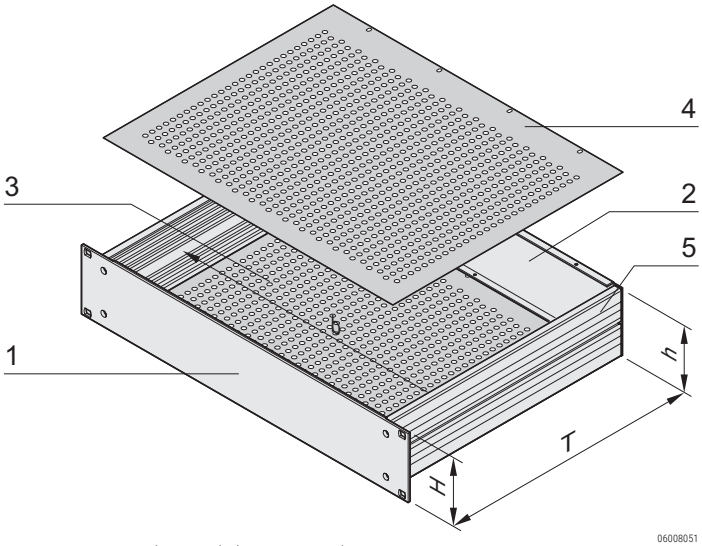

06008051

h = clear height (overall) (H - 8.1 mm)
width = 403 mm

b = clear installation

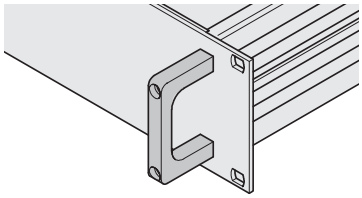

06002052

Front handle

- Complete chassis from aluminium
- Detachable rear panel for easy machining
- In the 1 U version 19" and ATX power supplies can be assembled up to a clearance of 35 mm
- EMC shielding of approx. 30 dB(A) at 1 GHz (without additonal shielding material)
- In accordance with standard IEC 60297-3-100, -101, -105

DELIVERY COMPRISES (kit)

Item	Qty	Description
1	1	Front panel, Al extrusion, 3 mm; Visible surface: clear anodized; Surface finsih: clear passivated
2	1	Rear panel, Al, 2 mm, surface finish: clear passivated
3	1	Base plate, perforated, Al, 1 mm
4	1	Cover plate, perforated, Al, 1 mm
5	2	Side panel, Al extrusion, raw; with grooves for threaded insert (2 x 7); 5 U, two-piece, 3+2 U
6	1	Assembly kit

ORDER INFORMATION

Height U	Height H mm	Depth T mm	Part no.
1	43.7	220	**20860-621**
1	43.7	280	**20860-622**
2	88.1	220	**20860-624**
2	88.1	280	**20860-625**
2	88.1	340	**20860-626**
3	132.6	280	**20860-627**
3	132.6	340	**20860-628**
3	132.6	400	**20860-629**
3	132.6	460	**20860-630**
4	177.0	340	**20860-632**
4	177.0	400	**20860-633**
4	177.0	460	**20860-634**
5	221.5	460	**20860-635**
EMC gasketing kit Silicone/nickel gasket 2100 mm for contacting side panel/cover plate; seal, stainless steel, for front panel/cover plate, 1 kit			**20860-130**
Front handles incl. assembly kit for 1 U, Al extrusion, anodised, PU 2 pieces			**20860-256**
Front handles incl. assembly kit for 2 U, Al extrusion, anodised, PU 2 pieces			**20860-257**
Front handles incl. assembly kit for 3 U, Al extrusion, anodised, PU 2 pieces			**20860-258**
Front handles incl. assembly kit for 4 U, Al extrusion, anodised, PU 2 pieces			**20860-259**
Front handles incl. assembly kit for 5 U, Al extrusion, anodised, PU 2 pieces			**20860-260**
Assembly tool, Screw driver Torx20 for M4 screws			**64560-027**

NOTE

- Mounting plate see page 6.118
- Threaded inserts to push into the side panel see page 6.121
- Telescopic slides to mount into cabinet see page 6.125

MAT 2024

19" chassis – MultipacPRO

19" COMPLETE CHASSIS FROM ALUMINIUM, FOR ASSEMBLY OF EUROBOARDS



06008004

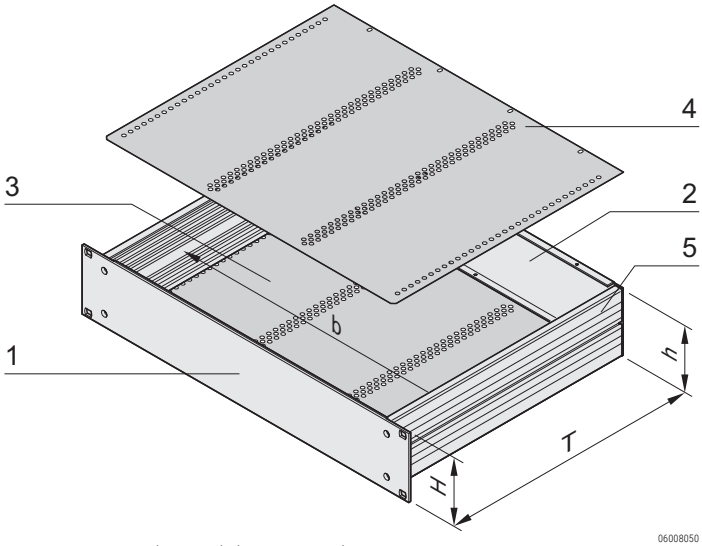

06008050

h = clear height (overall) (H - 8.1 mm)
width = 403 mm

b = clear installation

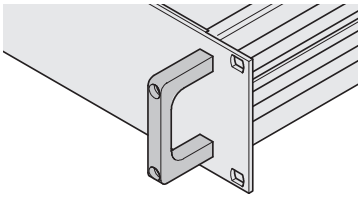

06002052

Front handle

- Complete chassis from aluminium
- Detachable rear panel for easy machining
- EMC shielding of approx. 30 dB(A) at 1 GHz (without additonal shielding material)
- In accordance with standard IEC 60297-3-100, -101, -105
- In the 1 U version 19" and ATX power supplies can be assembled up to a clearance of 35 mm

DELIVERY COMPRISES (Kit)

Item	Qty	Description
1	1	Front panel, Al extrusion, 3 mm; Visible surface: clear anodized; Surface finsih: clear passivated
2	1	Rear panel, Al, 2 mm, surface finish: clear passivated
3	1	Base plate, Al, 1 mm; with drilled holes for horizontal mounting of euroboards
4	1	Cover plate, Al, 1 mm; with drilled holes for horizontal mounting of euroboards
5	2	Side panel, Al extrusion, raw; with grooves for threaded insert (2 × 7)
6	1	Assembly kit

ORDER INFORMATION

Height U	Height H mm	Depth T mm	Part no.
1	43.7	220	20860-641
1	43.7	280	20860-642
2	88.1	280	20860-645
EMC gasketing kit PU 1 kit			**20860-130**
Front handles for 1 U PU 2 pieces			**20860-256**
Front handles for 2 U PU 2 pieces			**20860-257**
Euroboard mounting kit for EN 60603 connector for 1 U PU 1 kit			**20860-115**
Euroboard mounting kit for EN 60603 connector for 2 U PU 1 kit			**20860-117**
Euroboard mounting kit for insulated backplane mounting for 1 U PU 1 kit			**20860-116**
Euroboard mounting kit for insulated backplane mounting for 2 U PU 1 kit			**20860-118**
Assembly tool, Screw driver Torx20 for M4 screws			**64560-027**

NOTE

- Threaded inserts to push into the side panel see page 6.121
- Guide rails see page 6.124
- Telescopic slides to mount into cabinet see page 6.125

Part number in bold face type: ready for despatch within 2 working days
Part number in normal type: ready for despatch within 10 working days

MOUNTING PLATE FROM ALUMINIUM, FOR INSTALLATION OF NON-STANDARD OR HEAVY COMPONENTS



138303624

- Mounting Plate from Aluminium, for installation of non-standard or heavy components
- The mounting plate is fixed in the groove of the side panel profile through the threaded strips (M3).

DELIVERY COMPRISES (Kit)

Item	Qty	Description
1	1	Mounting plate, 2mm, Aluminium raw , Hole distance 5,08mm
2	2	Threaded insert 2mm, Steel zinc plated, M3.0, Lenght 156,98mm
3	2	Threaded insert 2mm, Steel zinc plated, M3.0, Lenght 55,38mm
4	1	Fixing kit incl. Assembly instruction

Mounting Plate full depth:

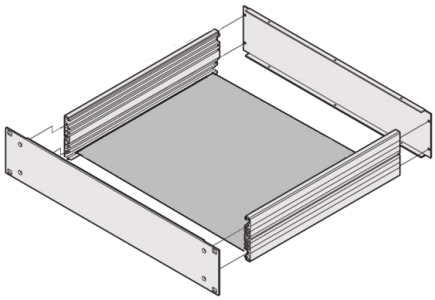

138303623

ORDER INFORMATION

MOUNTING PLATE, FULL DEPTH

Chassis depth in mm	Depth of Mounting Plate in mm (full depth)	Part no.
220	210	**20860-108**
280	270	**20860-109**
340	330	**20860-110**
400	390	**20860-111**
460	450	**20860-112**

Remark

- The mounting plate (full depth) is 10mm shorter than the chassis depth

Mounting Plate shortened:

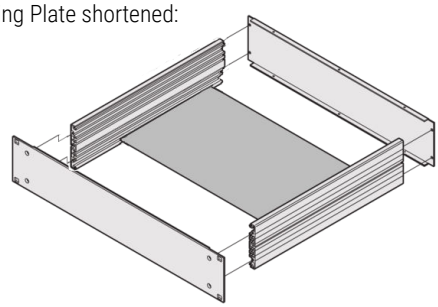

110434853

MOUNTING PLATE, SHORTENED -60MM

Chassis depth in mm	Depth of Mounting Plate in mm (shortened -60mm)	Part no.
220	150	**20860-107**
280	210	**20860-108**
340	270	**20860-109**
400	330	**20860-110**
460	390	**20860-111**

Remark

- Shortened mounting plate are always min. 70mm shorter than the chassis depth

Assembly Information:

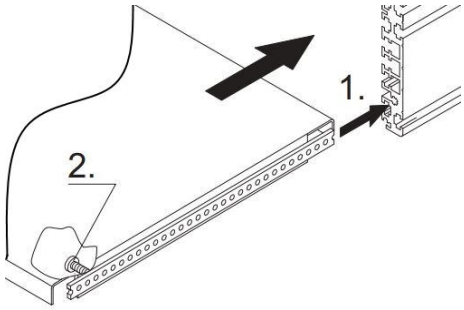

138303388

19" chassis – MultipacPRO

HOW TO CONFIGURE 19" ALUMINIUM CHASSIS

- Select height and depth of the basic kit
- Select further components

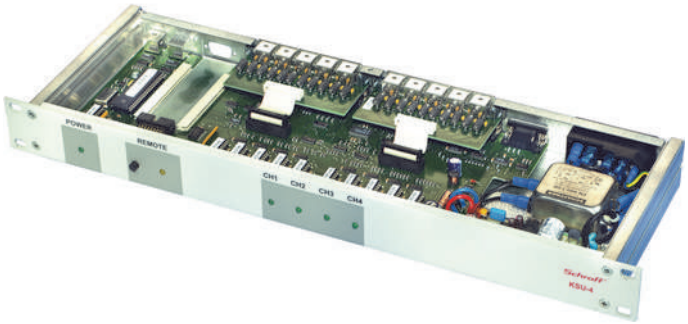

06006001

FOR NON-STANDARDISED ASSEMBLIES (1 ... 5 U)

- Mounting plate
- Top cover/base plate
- Front handles
- EMC gasketing kit
- Telescopic slides

NOTE

- Non-standardised assemblies see from page 6.120

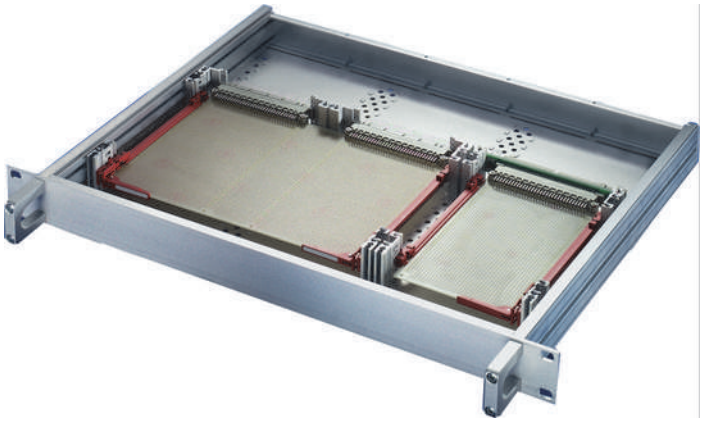

06002001

FOR STANDARDISED ASSEMBLIES (1, 2 U) IN ACCORDANCE WITH IEC 60297 -3-100, -101, -105

- Top cover/base plate for horizontal board mounting
- Internal connector or backplane fitting
- Front handles
- EMC gasketing kit
- Telescopic slide

NOTE

- Standardised assemblies from page 6.122

- Please select:
  - Height and depth of basic kit (1 ... 5 U, item 1+2+5)
  - Mounting plate
  - Top cover/base plate (item 3+4)
  - Front handles
  - EMC gasketing kit
  - Telescopic slides
- In accordance with IEC 60297-3-105

ORDER INFORMATION

	Basic kit	Mounting plate Full Depth, Chassis -10mm	Top cover/base plate	
			plain	perforated
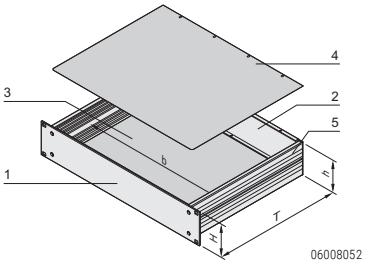 06008052 h = clear height (overall) (H - 8.1 mm) b = clear installation width = 403 mm	 06002004 1 x Al front panel, 3 mm, visible surface: clear anodized, surface finish; clear passivated; 2 x extruded Al side panels; 1 x Al rear panel, 2 mm, surface finish: clear passivated; incl. fixing material kit	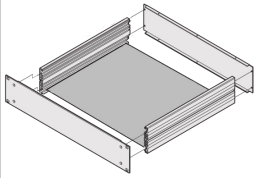 138303623 Al plate, 2 mm; for heavy fixtures, 405.5 mm width, 2 x threaded inserts, St, 2 mm, galvanized, 7 mm height, 55.38 mm length, 2 x threaded inserts, St, 2 mm, galvanized, 7 mm height, 156.98 mm length, threaded inserts with M3 threads, hole clearance 1 HP = 5.08 mm	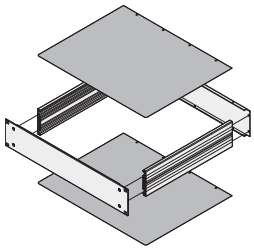 06002053 is inserted into the basic kit, Al, 1 mm, passivated; please order EMC gasketing kit separately	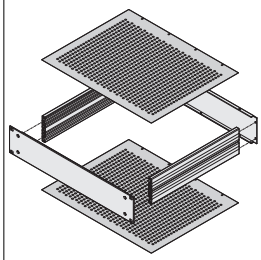 06007050 is inserted into the basic kit, Al, 1 mm, passivated; hole diameter 4 mm, perforation ratio 58 %

Height U	Height mm	Width HP	Depth mm	PU 1 kit	Depth mm	1 piece	1 piece	1 piece
1	43.7	84	220	**20860-201**	210	**20860-108**	**30860-501**	**30860-510**
1	43.7	84	280	**20860-202**	270	**20860-109**	**30860-502**	**30860-511**
1	43.7	84	340	**20860-203**	330	**20860-110**	**30860-503**	**30860-512**
1	43.7	84	400	**20860-204**	390	**20860-111**	**30860-504**	**30860-513**
1	43.7	84	460	**20860-205**	450	**20860-112**	**30860-505**	**30860-514**
2	88.1	84	220	**20860-210**	210	**20860-108**	**30860-501**	**30860-510**
2	88.1	84	280	**20860-211**	270	**20860-109**	**30860-502**	**30860-511**
2	88.1	84	340	**20860-212**	330	**20860-110**	**30860-503**	**30860-512**
2	88.1	84	400	**20860-213**	390	**20860-111**	**30860-504**	**30860-513**
2	88.1	84	460	**20860-214**	450	**20860-112**	**30860-505**	**30860-514**
3	132.6	84	280	**20860-219**	270	**20860-109**	**30860-502**	**30860-511**
3	132.6	84	340	**20860-220**	330	**20860-110**	**30860-503**	**30860-512**
3	132.6	84	400	**20860-221**	390	**20860-111**	**30860-504**	**30860-513**
3	132.6	84	460	**20860-222**	450	**20860-112**	**30860-505**	**30860-514**
4	177.0	84	280	**20860-228**	270	**20860-109**	**30860-502**	**30860-511**
4	177.0	84	340	**20860-229**	330	**20860-110**	**30860-503**	**30860-512**
4	177.0	84	400	**20860-230**	390	**20860-111**	**30860-504**	**30860-513**
4	177.0	84	460	**20860-231**	450	**20860-112**	**30860-505**	**30860-514**
5	221.5	84	460	**20860-240**	450	**20860-112**	**30860-505**	**30860-514**

NOTE

Assembly tool, Screw driver Torx20 for M4 screws (Assembly of Front panels, rear panels, handles, internal mounting kit) **64560-027**

Assembly tool, Screw driver Torx10 for M3 screws (Assembly of mounting plate) **64560-230**

Shortened Mounting Plates on page 6.118

19" chassis – MultipacPRO

ORDER INFORMATION

				Front handles	Threaded insert M3 for extruded side panel	EMC gasketing kit Shielding upgrade of approx. 30 dB	Assembly kit for telescopic slides
				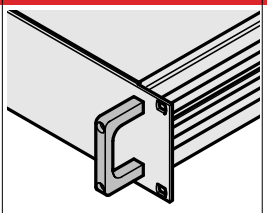 06002052	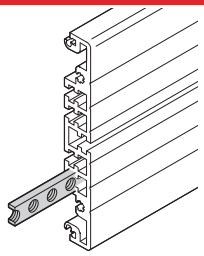 06007051	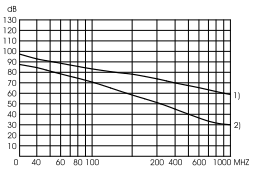 esa44237	
				Al extrusion, anodised, incl. assembly kit see page 5.108	St, 2 mm, zinc-plated, height 7 mm, length 431.3 mm, M3 hole clearance 1 HP = 5.08 mm	Gasket 2100 mm, silicone/nickel, for contacting side panel/ top cover and base plate; sawtooth gasket 400 mm; stainless steel, for contacting front panel/ top cover and base plate	Assembly kit and adaptor bracket for the cabinets VARISTAR, eurorack, minirack; for mounting the 19in. chassis on telescopic slides; please order telescopic slides separately see page 6.125
Height U	Height mm	Width HP	Depth D mm	PU 2 pieces	1 piece	PU 1 kit	PU 1 kit
1	43.7	84	220				
1	43.7	84	280				
1	43.7	84	340	**20860-256**			
1	43.7	84	400				
1	43.7	84	460				
2	88.1	84	220				
2	88.1	84	280				
2	88.1	84	340	**20860-257**			
2	88.1	84	400				
2	88.1	84	460		**30821-589**	**20860-130**	**20860-131**
3	132.6	84	280				
3	132.6	84	340	**20860-258**			
3	132.6	84	400				
3	132.6	84	460				
4	177.0	84	280				
4	177.0	84	340	**20860-259**			
4	177.0	84	400				
4	177.0	84	460				
5	221.5	84	460	**20860-260**			

NOTE

Assembly tool, Screw driver Torx20 for M4 screws (Assembly of Front panels, rear panels, handles, internal mounting kit) **64560-027**

Assembly tool, Screw driver Torx10 for M3 screws (Assembly of mounting plate) **64560-230**

- Further sizes available on request
- Al extrusion side panels up to 1000 mm length available on request
- Telescopic slides see page 6.125

Part number in bold face type: ready for despatch within 2 working days
Part number in normal type: ready for despatch within 10 working days

19" chassis – MultipacPRO

- Please select
  - Height and depth of basic kit (1, 2 U, items 1+2+5)
  - Top cover/base plate for horizontal board mounting (items 3+4)
  - Internal mounting for connector or backplane
  - Front handles
  - EMC gasketing kit
  - Telescopic slides
- In accordance with IEC 60297-3-100, 101, 105

ORDER INFORMATION

	Basic kit	Mounting of euroboards Top cover/base plate	for EN 60603 connectors	for insulated backplane assembly
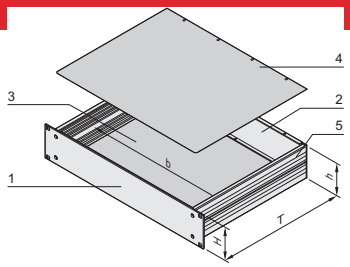 06008052	 06002004	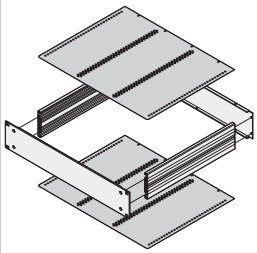 06008053	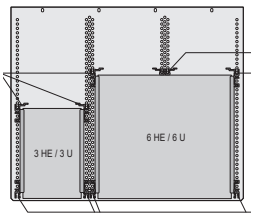 06003050	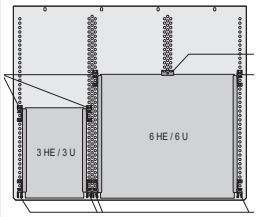 06003051
h = clear height (overall) (H - 8.1 mm) b = clear installation width = 403 mm	1 x Al front panel, 3 mm, visible surface: clear anodized, surface finish; clear passivated; 2 x extruded Al side panels; 1 x Al rear panel, 2 mm, surface finish: clear passivated; incl. fixing material kit	Al, 1 mm; with drilled holes for horizontal mounting of euroboards	2 x front horizontal rails, 2 x rear horizontal rails with Z, 2 x threaded inserts; Sufficient for one 3 U board or one 6 U board	2 x front horizontal rails, 2 x rear horizontal rails, 4 x threaded inserts, 4 x insulation strips PBT, UL 94; Sufficient for one 3 U board or one 6 U board (6 HP for 1 U, 15 HP for 2 U)

Height U	Height mm	Width HP	Depth D mm	PU 1 kit	1 piece	PU 1 kit	PU 1 kit
1	43.7	84	220	**20860-201**	**30860-519**	**20860-115**	**20860-116**
1	43.7	84	280	**20860-202**	**30860-520**	**20860-115**	**20860-116**
1	43.7	84	340	**20860-203**	**30860-521**	**20860-115**	**20860-116**
1	43.7	84	400	**20860-204**	**30860-522**	**20860-115**	**20860-116**
1	43.7	84	460	**20860-205**	**30860-523**	**20860-115**	**20860-116**
2	88.1	84	220	**20860-210**	**30860-519**	**20860-117**	**20860-118**
2	88.1	84	280	**20860-211**	**30860-520**	**20860-117**	**20860-118**
2	88.1	84	340	**20860-212**	**30860-521**	**20860-117**	**20860-118**
2	88.1	84	400	**20860-213**	**30860-522**	**20860-117**	**20860-118**
2	88.1	84	460	**20860-214**	**30860-523**	**20860-117**	**20860-118**

NOTE

Assembly tool, Screw driver Torx20 for M4 screws (Assembly of Front panels, rear panels, handles, internal mounting kit)	**64560-027**
Assembly tool, Screw driver Torx10 for M3 screws (Assembly of mounting plate)	**64560-230**

ORDER INFORMATION

				Front handles	Threaded insert M3 for extruded side panel	EMC gasketing kit for shielding upgrade of approx. 30 dB	Assembly kit for fixing on telescopic slides
				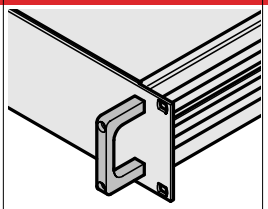 06002052	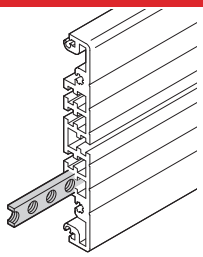 06007051	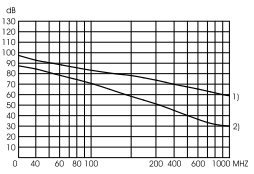 esa44237	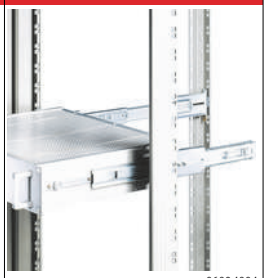 06094004
				Al extrusion, anodised, incl. assembly kit see page 5.108	St, 2 mm, zinc-plated, height 7 mm, length 431.3 mm, M3 hole clearance 1 HP = 5.08 mm	Gasket 2100 mm, silicone/nickel, for contacting side panel/ top cover and base plate; sawtooth gasket 400 mm; stainless steel, for contacting front panel/ top cover and base plate	Assembly kit and adaptor bracket for the cabinets VARISTAR, eurorack, minirack; for mounting the 19in. chassis on telescopic slides; please order telescopic slides separately see page 6.125
Height U	Height mm	Width HP	Depth D mm	PU 2 pieces	1 piece	PU 1 kit	PU 1 kit
1	43.7	84	220	**20860-256**	**30821-589**	**20860-130**	**20860-131**
1	43.7	84	280				
1	43.7	84	340				
1	43.7	84	400				
1	43.7	84	460				
2	88.1	84	220	**20860-257**			
2	88.1	84	280				
2	88.1	84	340				
2	88.1	84	400				
2	88.1	84	460				

NOTE

Assembly tool, Screw driver Torx20 for M4 screws (Assembly of Front panels, rear panels, handles, internal mounting kit) **64560-027**

Assembly tool, Screw driver Torx10 for M3 screws (Assembly of mounting plate) **64560-230**

- Further sizes available on request
- Al extrusion side panels up to 1000 mm length available on request
- Telescopic slides see page 6.125

Part number in bold face type: ready for despatch within 2 working days
Part number in normal type: ready for despatch within 10 working days

GUIDE RAILS FOR BOARDS WITHOUT FRONT PANELS, ONE-PIECE, GROOVE WIDTH 2 MM

ORDER INFORMATION

			Guide rails "Accessories"
Assembly - can be clipped into horizontal rails in Al extrusion - can be clipped into 1.5 mm thick plate **Storage temperature** from -40 °C ... +130 °C			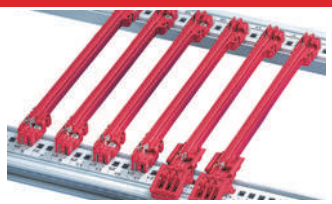 06102002 160, 220 mm length, PC, UL 94 V-0; 280 mm length, multi-piece, end piece PBT, UL 94 V-0, middle section Al extrusion
Board length mm	Groove width mm	Colour mm	PU 10 pieces [2]
160	2	red	**24568-363**
220	2	red	**24568-364**
280	2	red	**24568-381**
340	2	red	**24568-382**
Retention screw, PU 100 pieces	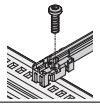		**24560-141**

2) Part no. includes one packing unit (PU); delivery is exclusively made in PU

GUIDE RAIL ACCESSORIES

ORDER INFORMATION

ESD clip for guide rails	Board locking C for PCBs without front panel	C board handle for board locking	Identification strips for board handle
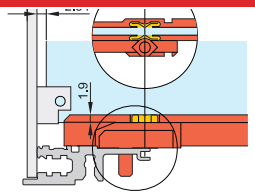 04503050	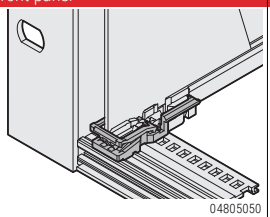 04805050	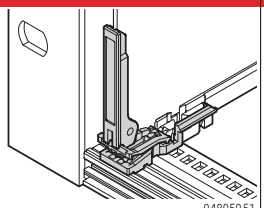 04805051	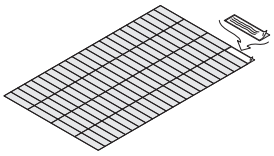 06108076
Spring steel, tin-plated, ensures conductive contact between board and horizontal rail, on both the solder side and the component side	PBT, UL 94 V-0, red, to fix the PCB in the subrack (also slot 1), can also be used without board handle, minimum distance 3 HP	PBT, UL 94 V-0, red, insertion/ extraction function with connection to board locking (also slot 1), mounting directly behind front panel (upper and lower), minimum distance 3 HP	Polyester film, 31 x 4 mm, self-adhesive, white/matt (1 A4 sheet contains 438 pieces) PBT, UL 94 V-0
PU 50 pieces	PU 10 pieces	PU 10 pieces	1 piece
24560-255	**24560-377**	**24560-378**	**60817-228**

19" chassis – MultipacPRO

UNIVERSAL 1 U TELESCOPIC SLIDE



- Static load-carrying capacity per pair 23 - 39 kg
- Lateral mounting on the 19" uprights (19" plane remains free for fixing the extension/drawer)
- Can be removed
- Extension length > 100 %
- Rail width k = 9.7 mm,
  max. installation width of extension/drawer w = 429 mm

DELIVERY COMPRISES

Item	Qty	Description
1	2	Telescopic slide, St, zinc-plated

ORDER INFORMATION

Length L mm	Extension length Y mm	Load-carrying capacity P kg	Part no.
356	381	39	**20110-090**
406	432	36	**20110-091**
457	483	34	**20110-092**
508	533	32	**20110-093**
559	584	29	**20110-094**
610	635	27	**20110-095**
660	686	23	**20110-096**
711	737	23	**20110-097**

NOTE

- For mounting into Schroff cabinets please order assembly kit separately, see page 6.123

00505011

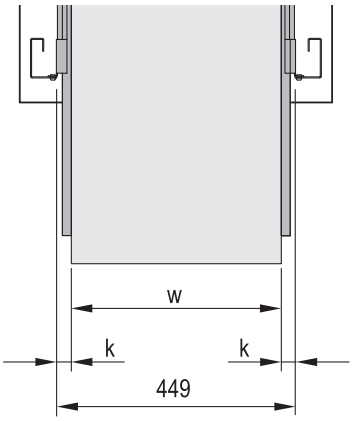

00505060

k = rail width, w = max. installation width

Dimensions table

L	Internal part								External part		
	A	B	C	D	E	F	G	X	O	P	Q
356	29.5	92.1	184.2	276.2	-	-	-	349.3	304.6	317.3	330.0
406	29.5	92.1	184.2	276.2	-	-	-	349.3	355.4	368.1	380.8
457	29.5	92.1	184.2	276.2	-	-	-	349.3	406.4	419.1	431.8
508	89.9	92.1	184.2	276.2	368.3	-	-	501.7	457.4	470.1	482.8
559	89.9	92.1	184.2	276.2	368.3	-	-	501.7	508.1	520.8	533.5
610	89.9	92.1	184.2	276.2	368.3	-	-	501.7	558.6	571.3	584.0
660	7.4	92.1	184.2	276.2	368.3	460.4	552.4	603.3	609.4	622.1	634.8
711	7.4	92.1	184.2	276.2	368.3	460.4	552.4	603.3	660.2	672.9	685.6

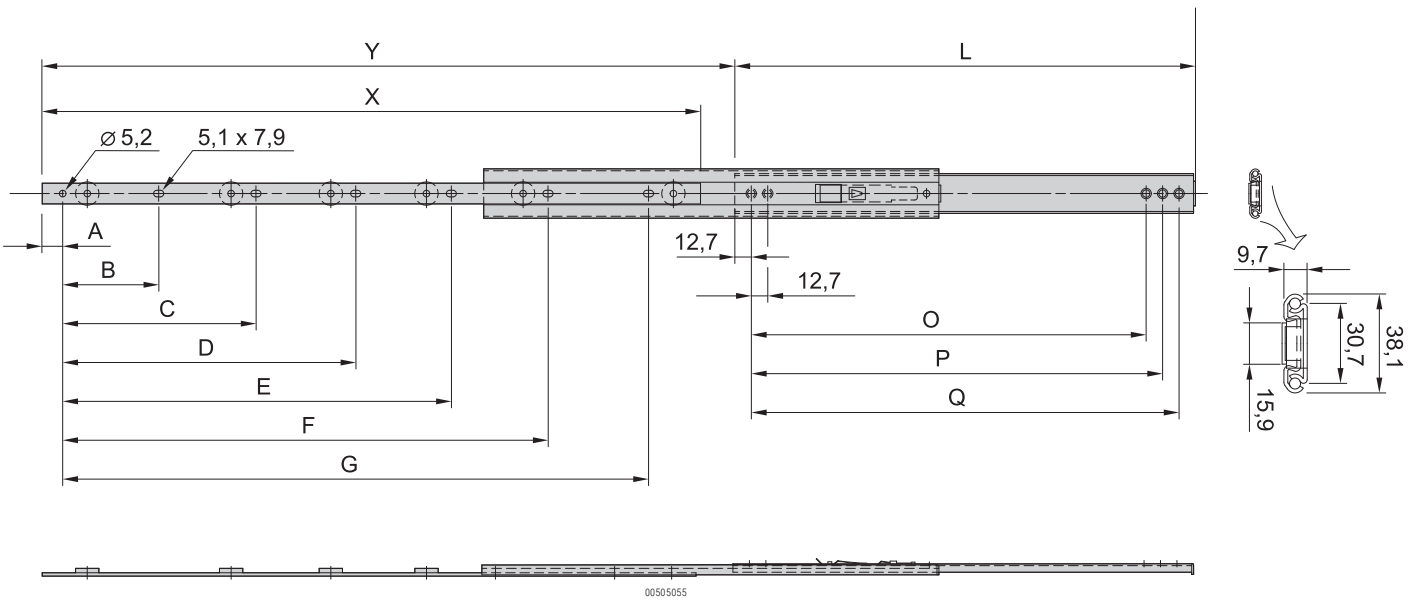

00505055

Part number in bold face type: ready for despatch within 2 working days
Part number in normal type: ready for despatch within 10 working days

19" chassis – MultipacPRO

UNIVERSAL 2 U, SLIM TELESCOPIC SLIDE



00505009

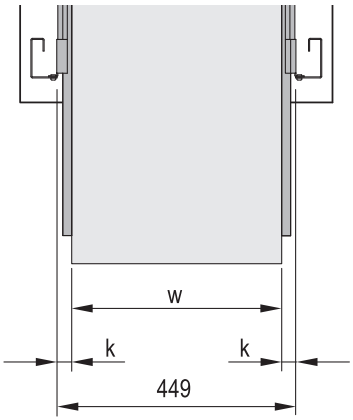

00505060005050 59

k = rail width, w = max. installation width

- Static load-carrying capacity per pair 46 - 57 kg
- Lateral mounting on the 19" uprights (19" plane remains free for fixing the extension/drawer)
- Locking at full extension
- Extension length > 110 %
- Rail width k = 9,7 mm,
  max. installation width of extension/drawer w = 429 mm

DELIVERY COMPRISES

Item	Qty	Description
1	2	Telescopic slide, St, zinc-plated

ORDER INFORMATION

Length L mm	Extension length Y mm	Load-carrying capacity P kg	Part no.
356	432	57	**20110-071**
406	483	55	**20110-072**
457	533	55	**20110-073**
508	584	55	**20110-074**
559	635	46	**20110-075**
584	660	46	**20110-076**
610	686	46	**20110-077**
Accessories			
Assembly kit for VARISTAR, for assembly of 2 telescopic slides, PU 1 kit			**21120-161**
Assembly kit for eurorack, for assembly of 2 telescopic slides, PU 1 kit			**21120-162**
Telescopic slides mounting kit for NOVASTAR, to mount 2 telescopic slides, PU 1 kit			**21120-163**
Delivery: supplied loose with cabinet or frame			**Part no./35**

Dimensions table

Length L	Internal part				External part		
	A	w	C	X	D	E	F
356	101.6	184.2	304.8	356.0	101.6	228.6	330.2
406	127.0	209.6	355.6	406.0	127.0	254.0	381.0
457	127.0	235.0	406.4	457.0	152.4	279.4	431.8
508	152.4	260.4	457.2	508.0	152.4	330.2	482.6
559	203.2	412.8	508.0	559.0	177.8	355.6	533.4
584	203.2	431.8	533.4	584.0	177.8	381.0	558.8
610	203.2	438.2	558.8	610.0	203.2	381.0	584.2

NOTE

- To mount on 19" plane please order assembly kit separately
- Universal telescopic rails can also be fitted without additional components in non-standard applications, thus also in other than 19" cabinets

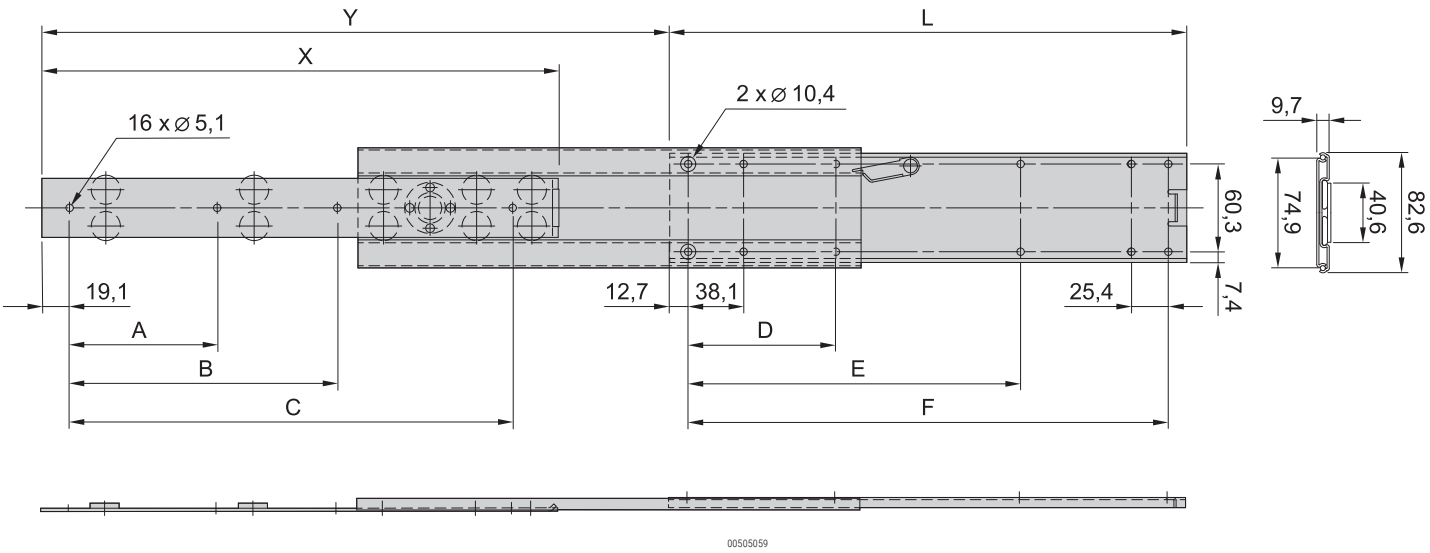

00505059

19" chassis – MultipacPRO

CUSTOMISED SOLUTIONS



06002006

Application: Different cut-outs

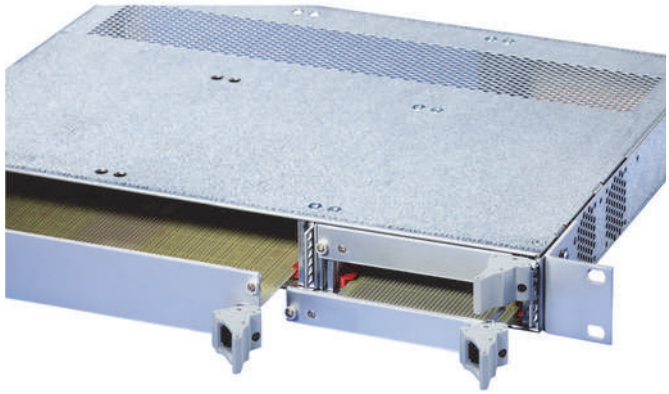

06002007

Application: Combined 3 U and 6 U assembly



06002005

Application: 2 U version with 2 x 3 U assembly



06008006

Application: 1 U multipacPRO (pizza box) complete from steel plate; 19" brackets can be removed if required



06108007

Application: 1 U multipacPRO complete from steel plate; front panel in aluminium with cut-outs



06101008

Application: 1 U multipacPRO complete from steel plate; printed 19" front panel in aluminium with cut-outs

Part number in bold face type: ready for despatch within 2 working days
Part number in normal type: ready for despatch within 10 working days

North America

Warwick, RI, USA
Tel +1.401.738.1722
San Diego, CA, USA
Tel +1.858.740.2400

Europe, Middle East & India

Straubenhardt, Germany
Tel +49 7082 794 0
Betschdorf, France
Tel +33 3 88 90 64 90
Warsaw, Poland
Tel +48 22 209 98 35
Hemel Hempstead,
Great Britain
Tel +44 1442 24 04 71
Lainate, Italy
Tel +39 02 932 714 1
Dubai, United Arab Emirates
Tel +971 4 82 38 666
Bangalore, India
Tel +91 80 6715 8900
Istanbul, Turkey
Tel +90 541 368 0941

Asia Pacific

Shanghai, China
Tel +86 21 2412 6943
Singapore
Tel +65 6768 5800
Shin-Yokohama, Japan
Tel +81 45 476 0271

Our powerful portfolio of brands:

CADDY ERICO HOFFMAN RAYCHEM SCHROFF TRACER

nVent

nVent.com/SCHROFF

©2018 nVent. All nVent marks and logos are owned or licensed by nVent Services GmbH or its affiliates. All other trademarks are the property of their respective owners.
nVent reserves the right to change specifications without notice.