SOLENOID VALVES

anti-waterhammer
pilot operated, hung diaphragm
3/8 to 1

NC

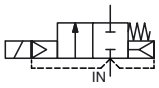



C

FEATURES

- *Two way shut-off valves for the control of cold and hot water*
- *Zero bar minimum operating pressure*
- *Valves are designed to reduce waterhammer*
- *Self-cleaning device located in the bleed orifice to guarantee an optimal performance*
- *The solenoid valves satisfy all relevant EC directives*

GENERAL

Differential pressure 0 to 10 bar [1 bar =100 kPa]
Maximum viscosity 40 cSt (mm²/s)

fluids (∗)	temperature range (TS)	seal materials (∗)
water	- 20°C to + 85°C	NBR (nitrile)

CONSTRUCTION

Anti-waterhammer test EN 60730-2-8 (CENELEC)
FCI-82-1 (Fluid Controls Institute)

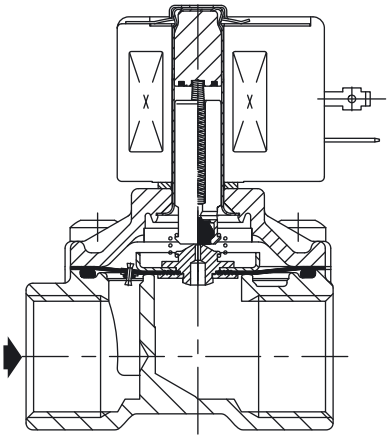

MATERIALS IN CONTACT WITH FLUID

(∗) Ensure that the compatibility of the fluids in contact with the materials is verified

Body Brass
Internal parts Stainless steel
Springs Stainless steel
Seals, diaphragm and disc NBR
Shading coil Copper

ELECTRICAL CHARACTERISTICS

Coil insulation class F
Connector Spade plug (cable Ø 6-10 mm)
Connector specification ISO 4400 / EN 175301-803, form A
Electrical safety IEC 335
Electrical enclosure protection Moulded IP65 (EN 60529)
Standard voltages DC (=) : 24V - 48V
(Other voltages and 60 Hz on request) AC (~) : 24V - 48V - 115V - 230V / 50 Hz

prefix option	power ratings inrush ~	holding ~		hot/cold =	operator ambient temperature range (TS)	replacement coil ~	replacement coil =	type (1)
	(VA)	(VA)	(W)	(W)	(C°)	230 V/50 Hz	24 V DC	
SC	34	15,6	6	-	-20 to + 75	400325-117	-	01
	30	22,5	9	9,5/15,3	-20 to + 50	400325-217	400325-242	

(1) Refer to the dimensional drawings on the following page.

SPECIFICATIONS

pipe size	orifice size	flow coefficient Kv		operating pressure differential (bar) min.	operating pressure differential (bar) max. (PS) water (∗)		power coil (W)		catalogue number	options EPDM		
G	(mm)	(m³/h)	(l/min)		~	=	~	=				
NC - Normally closed												
3/8	12,5	2,1	35	0	10	10	6	15,3	**SCG238A044**	**E**	-	-
1/2	12,5	2,1	35	0	10	10	6	15,3	**SCG238A046**	**E**	-	-
1/2	19	4,2	70	0	10	10	6	15,3	**SCG238A047**	**E**	-	-
3/4	19	4,5	75	0	10	10	6	15,3	**SCG238A048**	**E**	-	-
3/4	25	10	166	0	10	10	9	15,3	**SCG238A049**	-	-	-
1	25	10	166	0	10	10	9	15,3	**SCG238A050**	-	-	-

00039GB-2011/R02
Availability, design and specifications are subject to change without notice. All rights reserved.

OPTIONS

- Valves can also be supplied with EPDM (ethylene-propylene) seals and discs. Use the appropriate optional suffix letter for identification
- Explosionproof enclosures for use in zones 1/21-2/22, categories 2-3 to ATEX Directive 94/9/EC (see “Explosionproof solenoids” section)
- WRAS approval
- Other pipe connections are available on request
- Plug with visual indication and peak voltage suppression or with cable length of 2 m (see Solenoids, Coils & Accessories section)

INSTALLATION

- The solenoid valves can be mounted in any position without affecting operation
- Threaded pipe connection is standard: G = G (ISO 228/1)
- Installation/maintenance instructions are included with each valve

SPARE PARTS KIT

catalogue number	spare parts kit no.	
	~	=
SCG238A044/046	**C132486**	**C132487**
SCG238A045/047/048	**C132488**	**C132489**
SCG238A049/050	**C132490**	**C132491**

ORDERING EXAMPLES:

SC G 238 **A** 044 230V / 50 Hz
SC G 238 **A** 046 **E** 115V / 50 Hz
SC G 238 **A** 049 24V / DC
SC G 238 **A** 050 48V / 50 Hz

prefix
pipe thread
basic number
voltage
suffix

ORDERING EXAMPLES KITS:

C132486(1)
C132489 **E**
C132490

basic number
suffix

DIMENSIONS (mm), WEIGHT (kg)



TYPE 01
Prefix “SC” Solenoid
Epoxy moulded
IEC 335 / ISO 4400
IP65

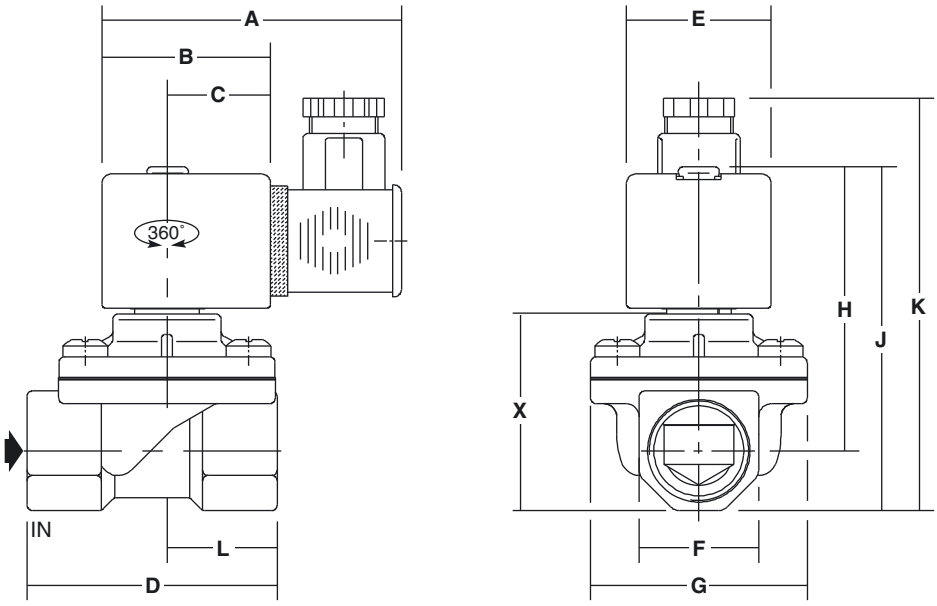

type	prefix option	catalogue number	A	B	C	D	E	F	G	H	J	K	L	X	weight (1)
01	SC	SCG238A044	80	45	27,5	52	39	27	37	72	85	104	23	40	0,55
		SCG238A046	80	45	27,5	52	39	27	37	72	85	104	23	40	0,50
		SCG238A047	80	45	27,5	65	39	27	58	74	87	106	29,5	42	0,75
		SCG238A048	80	45	27,5	67	39	32	58	76	92	111	29,5	47	0,70
		SCG238A049	80	45	27,5	86	39	41	73	92	112	131	37	67	1,30
		SCG238A050	80	45	27,5	86	39	41	73	92	112	131	37	67	1,20

(1) Incl. coil(s) and connector(s).

00039GB-2007/R03
Availability, design and specifications are subject to change without notice. All rights reserved.