VERDERFLEX®



VERDERFLEX OEM

M1500 Pumps

Any questions? You may still have questions and/or comments after reading this brochure. Please feel free to contact us on +44 (0)1924 221 020 You can also respond via email to info@verderflex.com. For more information about Verderflex please visit our website **www.verderflex.com**



VERDERFLEX®

VERDERFLEX
Unit 3, California Drive,
Castleford WF10 5QH
United Kingdom

TEL +44 (0)1924 221 020
FAX +44 (0)113 222 0291
MAIL info@verderflex.com
WEB www.verderflex.com

AT Wien **BE** Aartselaar **BG** Sofia **CH** Basel **CN** Shanghai **CZ** Praha **DE** Haan **FR** Eragny s/Oise **GB** Castleford **HU** Budapest **IT** Torre Boldone **JP** Tokyo **NL** Groningen/Vleuten **PL** Katowice **RO** Bucuresti/Sibiu **RU** St Petersburg **SK** Bratislava **US** Newtown/Macon **ZA** Northriding

M1500.EN.0211

VERDER
passion for pumps



M1500

Robust polycarbonate ABS blend casing.

- Flow rates to 2.2 l/min (35 US GPH)
- D.C. motor options provide speed/flow rate variations
- Typically used in:
  Vending,
  Chemical dosing
  Crop spraying

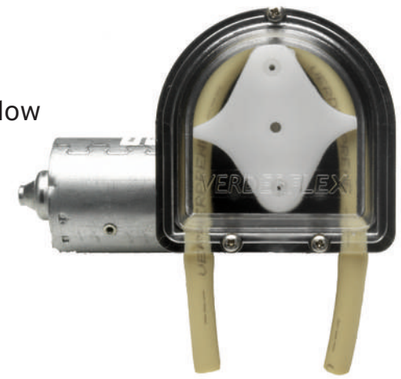

M1500 Free Flow Curve

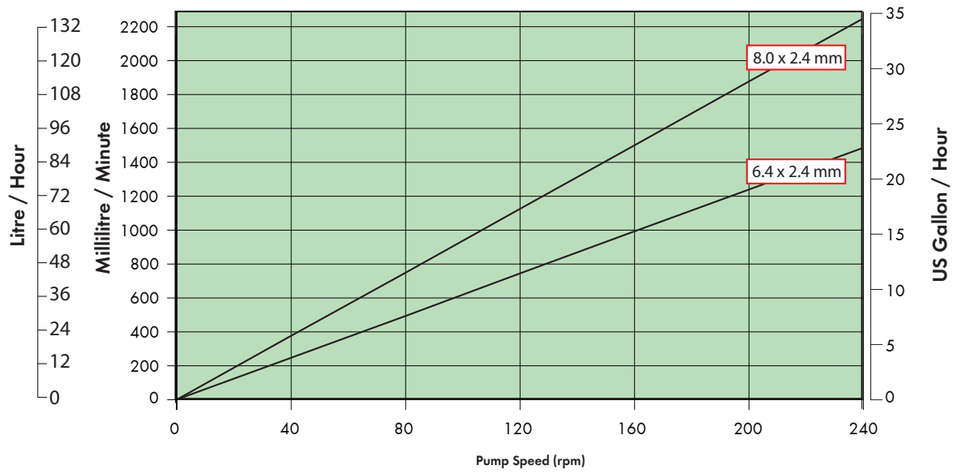

Suction

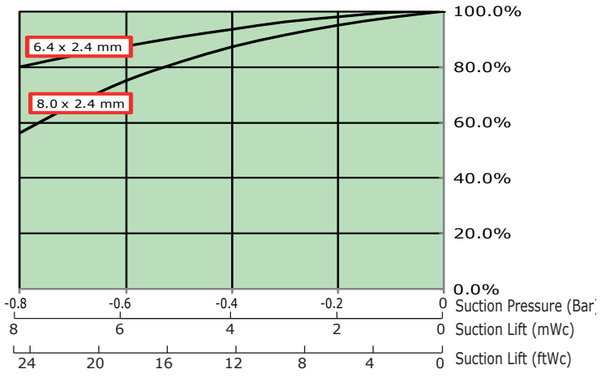

Discharge

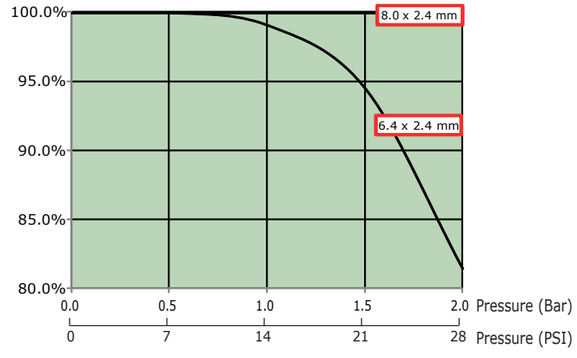

Flow rates with water at 20°C (68°F)

Technical Overview

Function	Detail
Pump head	Black cycoloy with support bearing
Motor	Asynchronous shaded pole motor with thermal protection and cooling fan spur gearbox
Rotor	2-roller design, Nylon 6, with Acetal polymer rollers
Power Supply	12/24V D.C. 30W, robust motor 100W or 110/220/240V 50/60Hz 290W
Tube	Verderprene, Silicone, Viton® and Tygon®
Tube Sizes	6.4 x 2.4mm, 8.0 x 2.4mm
Weight	1.8 kg (4.0 lb)

Tube Size Options

Tube (ID x WT)	65 RPM	85 RPM	125 RPM	176 RPM
6.4 x 2.4 mm (1/4" x 3/32")	0.4 l/min 24.3 l/hr 6.4 GPH	0.5 31.8 8.4	0.8 46.8 12.4	1.0 65.9 17.4
8.0 x 2.4 mm (5/16" x 3/32")	0.6 l/min 36.4 l/hr 9.6 GPH	0.8 47.6 12.6	1.2 69.8 18.5	1.6 97.5 26.0

General Arrangement Drawing and Mounting Positions

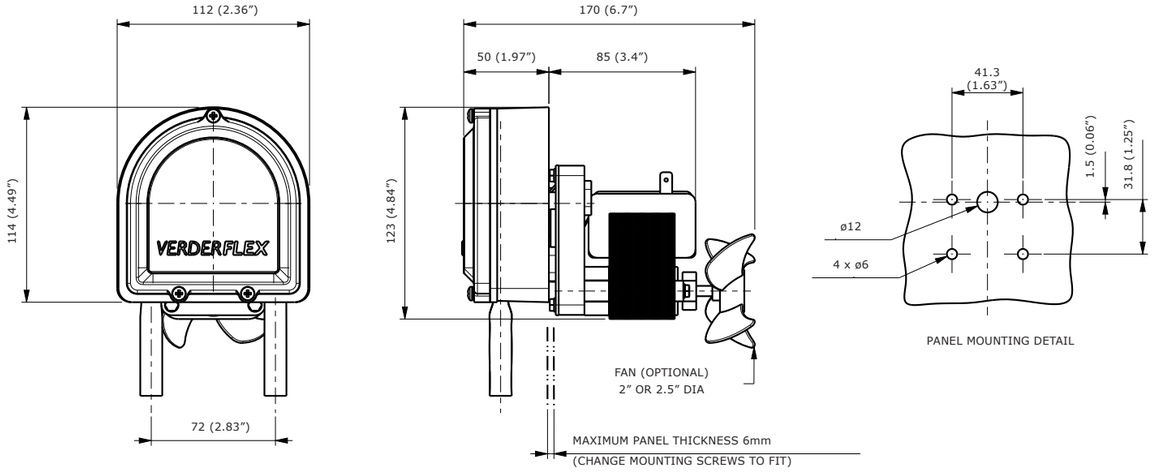

All dimensions in millimetres and inches