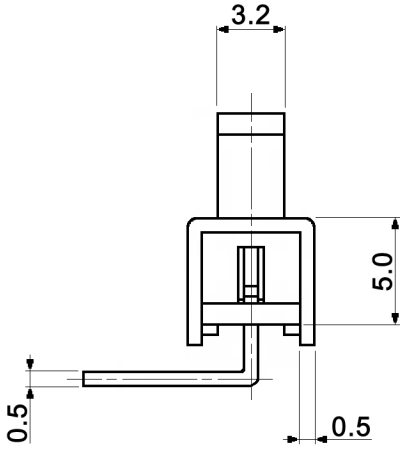

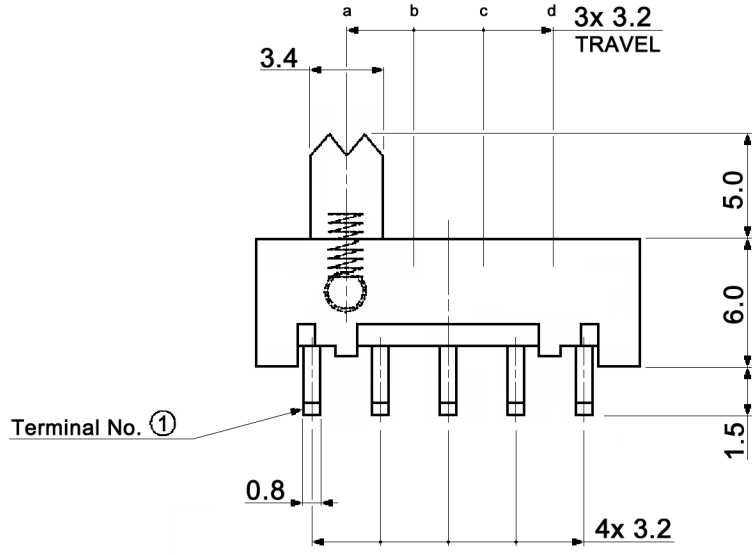

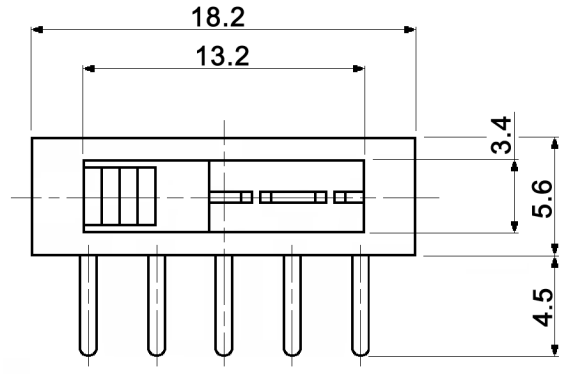

HOLE LAYOUT ⌖ 0.05

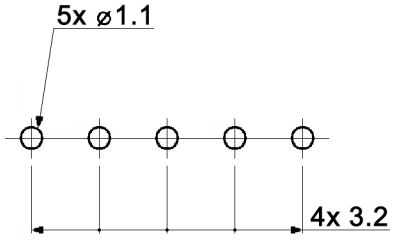

CIRCUIT DIAGRAM
BOTTOM VIEW

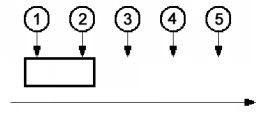

Compliance: RohS II (2011/65/EU)

Tolerances: up to 10: ±0.2mm above 10-50: ±0.3mm			Date 01/02	Name us	MFP 140-R
			knitter-switch	30 02 91	Page 1/2
Revised	06/14	dr			
Modifications	Date	Name			

Specifications:

Contact rating:	0.3A, 30V DC
Contact resistance:	20mOhm max.
Insulation resistance:	100MOhm min. at 500V DC
Dielectric strength:	500V AC for 1 minute (50/60Hz)
Operating temperature:	-10°C to +60°C
Mechanical life:	min. 10 000 cycles
Operating force:	300 +/-150gf
Soldering conditions:	wave soldering: 260 +/-5°C, 5 +/-1sec.
Contact timing:	non-shorting
Material:	Terminal: brass, silver plated
	Base: phenolic, natural
	Frame: steel, nickel plated
	Contact plate: brass, silver plated
	Spring: SWC, temper
	Slider: PA, black
Packaging:	Part weight 1.32g per piece
	700 pcs. per bag
	2 bags per carton-box 23x8x15cm
	10 carton-boxes per outer carton 45x24x33cm, gross weight 20.1kg

Compliance: RohS II (2011/65/EU)

Tolerances: up to 10: ±0.2mm above 10-50: ±0.3mm			Date	Name	MFP 140-R	
			01/02	us		
			knitter-switch		30 02 91	Page 2/2
Modifications	Date	Name				