Remote Switch
IK 8800, IL 8800

Translation of the original instructions

0222086


IK 8800


IL 8800.03

Your Advantages
- Optionally with up to max. 4 changeover contacts
- Low energy consumption by impulse operation
- Small amount of wiring required at installations with serval local push buttons

Features
- According to IEC/EN 60669
- Impulse operation
- Pushbutton for manual actuation of the contacts
- Operating position display
- Optionally contacts with up to a maximum of 4 changeover contacts
- Width 17.5 mm or 35 mm

Circuit Diagram

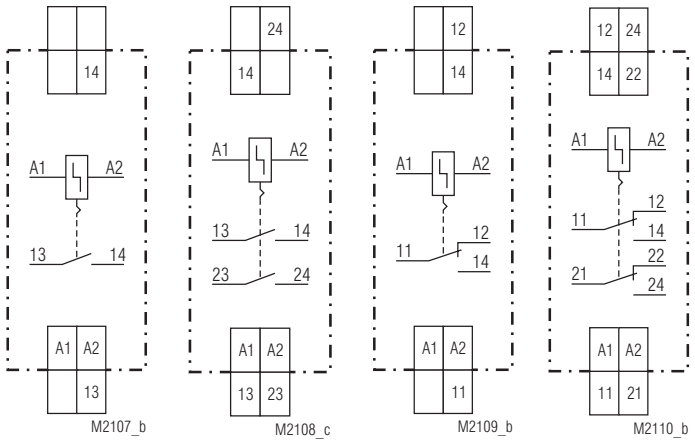

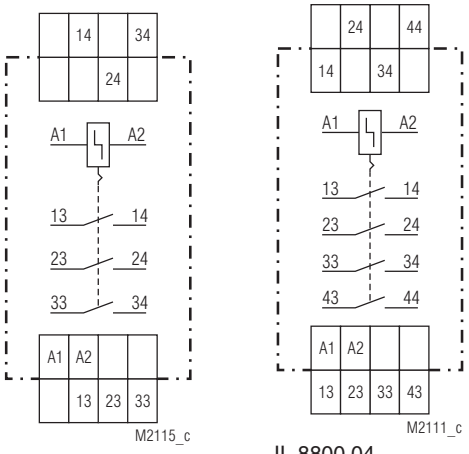

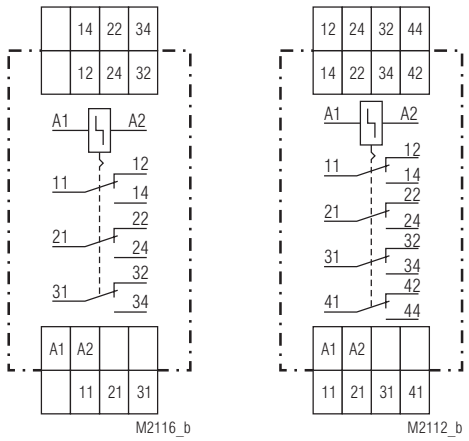

Approvals and Markings

CE

Function

The contacts are actuated with every current pulse and they stay in the operating position they have adopted in each case until the next pulse occurs. It is possible to actuate the contacts manually by pressing a pushbutton provided on the unit. The contact position is shown by an indicator. The units can be installed in rows close next to each other for pulse operation. The gap between the relays is 7 mm when they are on permanently.

Indicators

Red indicator:	Is visible when output contacts are activated

Connection Terminals

Terminal designation	Signal description
A1	Control signal L resp. DC+
A2	Neutral N resp. DC-
13/14, 23/24, 33/34, 43/44	NO contact LOAD
11/12/14, 21/22/24, 31/32/34, 41/42/44	C/O LOAD

All technical data in this list relate to the state at the moment of edition. We reserve the right for technical improvements and changes at any time.

Technical Data

Input

Nominal voltage U_N:	AC 8, 24, 42, 230 V DC 12, 24 V, other voltages on request	
Voltage range:	0.9 ... 1.1 U_N	
Nominal consumption:	1.2 contacts	4 contacts
Apparent power:	5.2 VA	10.4 VA
Actual power:	4.2 W	8.4 W
Nominal frequency:	50 or 60 Hz	
Frequency range:	± 5 %	
Glow lamp parallel to the pushbutton:	Max. 8 lamps à 0.5 mA (corresponds to 4 mA residual current)	
Minimum on time	> 50 ms	

Output

Contacts	
IK 8800.01:	1 NO contact
IK 8800.02:	2 NO contacts
IL 8800.03:	3 NO contacts
IL 8800.04:	4 NO contacts
IK 8800.11:	1 changeover contact
IK 8800.12:	2 changeover contacts
IL 8800.13:	3 changeover contacts
IL 8800.14:	4 changeover contacts
Operate time:	< 30 ms
Nominal output voltage:	AC 230 V / 400 V
Electrical life	
with resistive load AC 230 V	
and 500 switching cycles / h:	6 A 150 x 10^4 switching cycles
	10 A 75 x 10^4 switching cycles
	16 A 10 x 10^4 switching cycles
Switching capacity with lamp load:	
Fluorescent lamp load:	20 lamps with 58 W / contact each
With electronic series reactor:	58 lamps with 18 W / contact each
Duo circuit (series compensated):	2 x 20 lamps with 58 W / contact each 5 x 10^4 switching cycles The starting current levels can be very high in parallel compensation configurations and when electronic ballast units are being used. Automatic fuses must be incorporated in the circuit if necessary.
Bulb load:	2000 W 5 x 10^4 switching cycles
Nominal switching-off capacity:	
cos. φ 1 ... 0.7, AC 230 V:	16 A
Thermal current I_{th}:	16 A
Permissible switching frequency:	1000 switching cycles / h
Short circuit strength max. fuse rating:	16 A gG / gL IEC/EN 60947-5-1
Mechanical life:	3 x 10^6 switching cycles

General Data

Operating mode:	Pulse operation In case of failure 100 % to duty cycle possible	
Temperature range		
Operation:	- 20 ... + 45 °C	
Storage:	- 25 ... + 55 °C	
Altitude:	≤ 2000 m	
Clearance and creepage distances		
Rated impulse voltage / pollution degree:	4 kV / 2	IEC 60664-1
EMC		
Electrostatic discharge:	8 kV (air)	IEC/EN 61000-4-2
HF irradiation:		
80 MHz ... 2.7 GHz:	10 V / m	IEC/EN 61000-4-3
Fast transients:	4 kV	IEC/EN 61000-4-4
Surge voltages between		
wires for power supply:	1 kV	IEC/EN 61000-4-5
Between wire and ground:	2 kV	IEC/EN 61000-4-5
HF wire guided:	10 V	IEC/EN 61000-4-6
Interference suppression:	Limit value class B	EN 55011

Technical Data

Degree of protection:		
Housing:	IP 30	IEC/EN 60529
Terminals:	IP 20	IEC/EN 60529
Housing:	Thermoplastic with V0 behaviour according to UL subject 94	
Vibration resistance:	Amplitude 0.35 mm frequency 10 ... 55 Hz	IEC/EN 60068-2-6
Climate resistance:	Humid heat	IEC/EN 60068-2-30
Terminal designation:	EN 50005	
Wire connection:	2 x 2.5 mm² solid or 2 x 1.5 mm² stranded ferruled DIN 46228-1/-2/-3/-4 or 2 x 1 mm² stranded ferruled DIN 46228-1/-2/-3/-4	
Wire fixing:	Flat terminals with self-lifting clamping piece	IEC/EN 60999-1
Fixing torque:	0.8 Nm	
Mounting:	DIN rail	IEC/EN 60715
Weight		
IK 8800:	110 g	
IL 8800:	210 g	

Dimensions

Width x height x depth	
IK 8800:	17.5 x 89 x 58 mm
IL 8800:	35 x 89 x 58 mm

Standard Type

IK 8800.01 AC 230 V 50 Hz

Article number:	0009273
• Output:	1 NO contact
• Nominal voltage U_N:	AC 230 V
• Width:	17.5 mm

Variants

I_ 8800.__/001:	For switching small loads from min. 10 mVA / mW to max. 6 VA / W at 2 ... 60 V / 2 ... 300 mA. The contacts also permit the max. switching current. However, as the gold plating is burnt off at this current, the device is no longer suitable for switching small loads.
IK 8800.01/008:	3 mm contact spacing (only possible for one NO contact)

Ordering Example for Variant

IK 8800 .01 /_ _ _ AC 230 V 50 Hz

- 50 Hz — Nominal frequency
- AC 230 V — Nominal voltage
- /_ _ _ — Variant, if required
- .01 — Contacts
- IK 8800 — Type

Safety Notes

Dangerous voltage.
Electric shock will result in death or serious injury.

Disconnect all power supplies before servicing equipment.

- Faults must only be removed when the relay is disconnected.
- The device may only be installed and put into operation by experts who are familiar with this technical documentation and the applicable health and safety and accident prevention regulations.
- The user has to make sure that the device and corresponding components are installed and wired according to the local rules and law (TUEV, VDE, Health and safety).
- Installation work must only be done when power is disconnected

Connection Examples

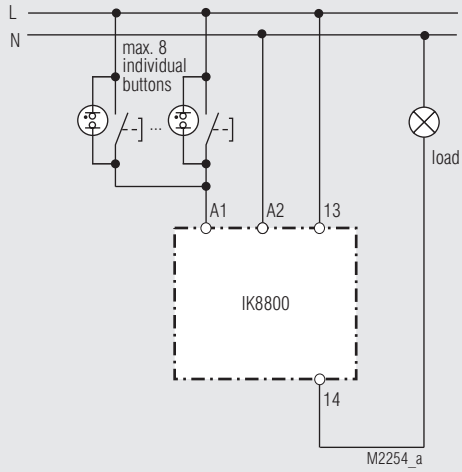

This circuit can be used with up to 8 illuminated pushbuttons.

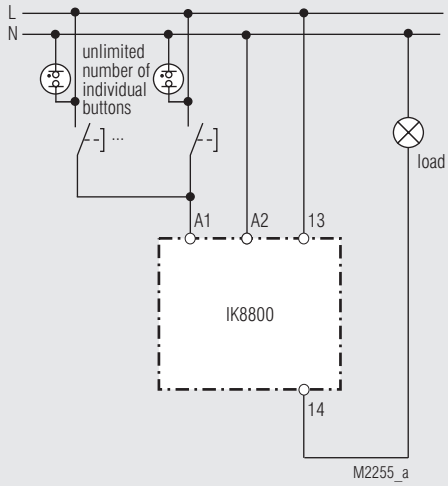

With this circuit it is possible to connect as many illuminated pushbuttons as required to a remote switch.

When low voltages are being used, the control circuit has to be disconnected from the mains system by means of a transformer. It is only possible to illuminate the pushbuttons here by providing a third control wire.