OJ5078

Diffuse reflection sensor with background suppression

OJH-FPKG/SO/0,15M/US

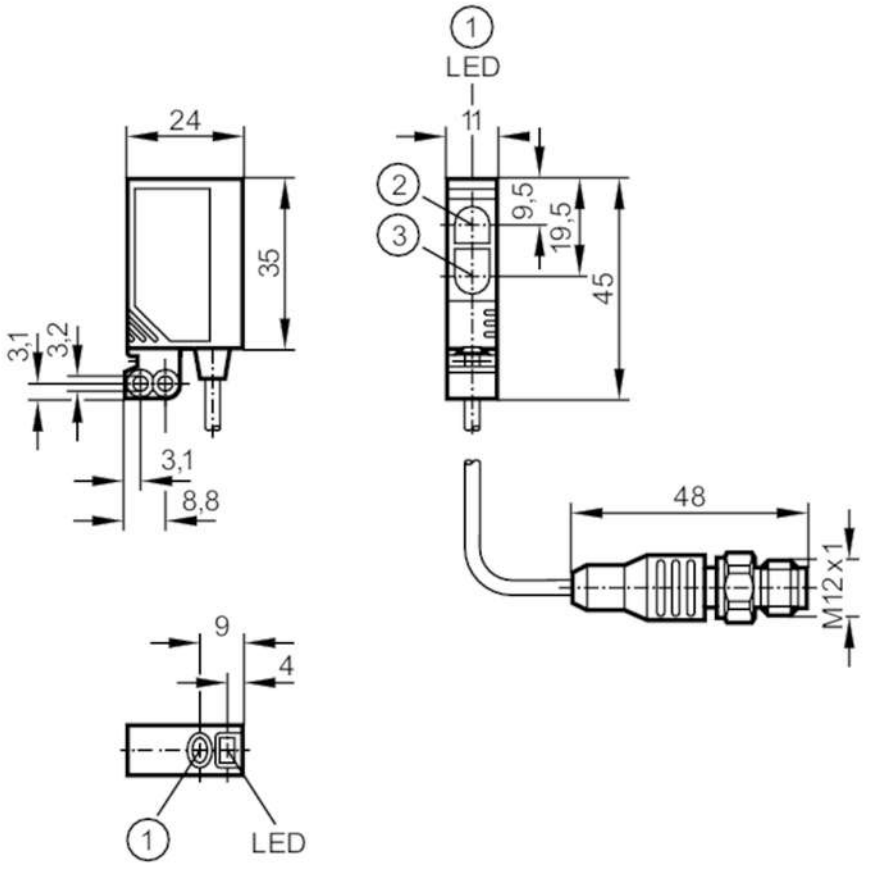

1 pushbutton
2 receiver
3 transmitter

Product characteristics		
Type of light		red light
Housing		rectangular
Application		
Special feature		Gold-plated contacts; Background suppression
Function principle		Diffuse reflection sensor
Electrical data		
Operating voltage	[V]	10...30 DC
Current consumption	[mA]	25
Protection class		III
Reverse polarity protection		yes
Type of light		red light
Wave length	[nm]	660
Outputs		
Electrical design		PNP

OJ5078

Diffuse reflection sensor with background suppression

OJH-FPKG/SO/0,15M/US

Output function			light-on/dark-on mode; (programmable)
Max. voltage drop switching output DC	[V]		2.5
Permanent current rating of switching output DC	[mA]		200
Switching frequency DC	[Hz]		1000
Short-circuit protection			yes
Type of short-circuit protection			pulsed
Overload protection			yes
Detection zone			
Range	[mm]		15...400; (white paper 200 x 200 mm 90% remission)
Range adjustable			yes
Max. light spot diameter	[mm]		18
Light spot dimensions refer to			Range
Background suppression available			yes
Operating conditions			
Ambient temperature	[°C]		-25...60
Protection			IP 67
Tests / approvals			
EMC		EN 60947-5-2	
MTTF	[years]		556
Mechanical data			
Weight	[g]		40.6
Housing			rectangular
Dimensions	[mm]		35 x 11 x 24
Materials			housing: ABS; fixture: diecast zinc; LED window: SEPS; pushbutton: SEPS
Lens material			PMMA
Lens alignment			side lens
Displays / operating elements			
Display		switching status	1 x LED, yellow
		operation	1 x LED, green
Electronic lock			yes
Accessories			
Items supplied			Basic clip: 1, E20964
			screws: 2 x M3 x 16
			spring washers: 2
			Nuts: 2
Remarks			
Remarks			operating voltage "supply class 2" according to cULus
Pack quantity			1 pcs.

OJ5078

Diffuse reflection sensor with background suppression

OJH-FPKG/SO/0,15M/US

Electrical connection

Cable: 0.15 m, PVC

Connector: 1 x M12; coding: A; Moulded body: Hytrel 8068; Locking: stainless steel (316L/1.4404); Contacts: gold-plated



Connection

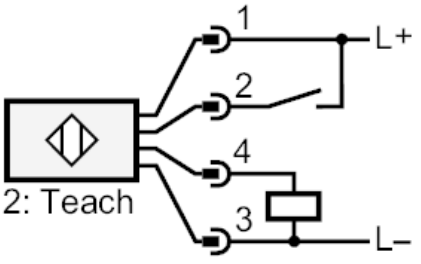

Diagrams and graphs

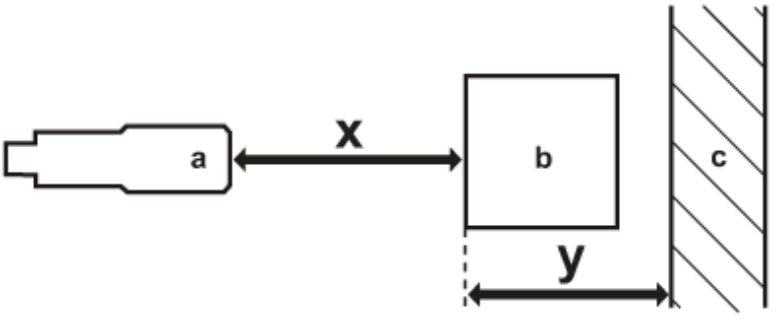

a: sensor
b: object
c: background
x: distance sensor/object [mm]
y: min. distance object/background [mm]

OJ5078

Diffuse reflection sensor with background suppression

OJH-FPKG/SO/0,15M/US

accuracy graph

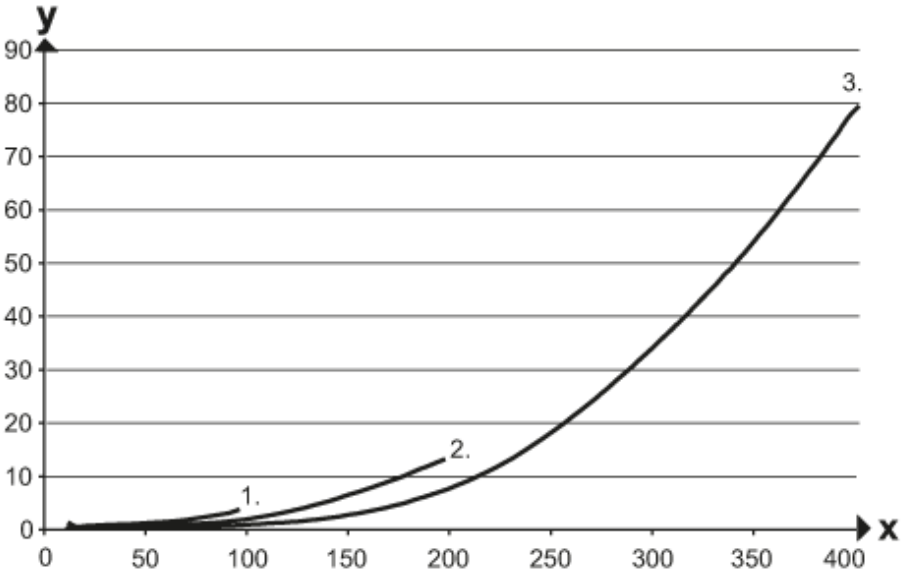

x: distance sensor/object [mm]

y: min. distance object/background [mm]

1 = object black (6 % remission) , background white (90 % remission)

2 = object grey (18 % remission) , background white (90 % remission)

3 = object white (90 % remission) , background white (90 % remission)