WIRING DIAGRAM

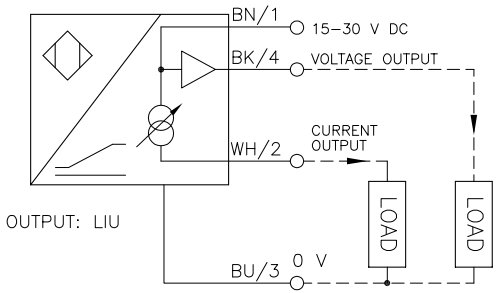

LOCKNUT LN–M18

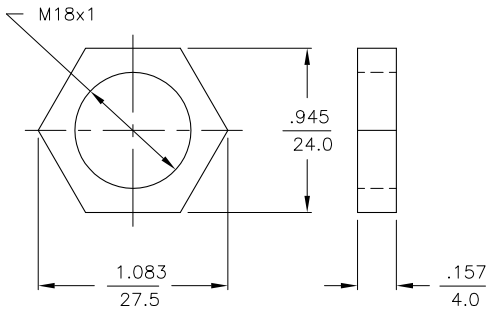

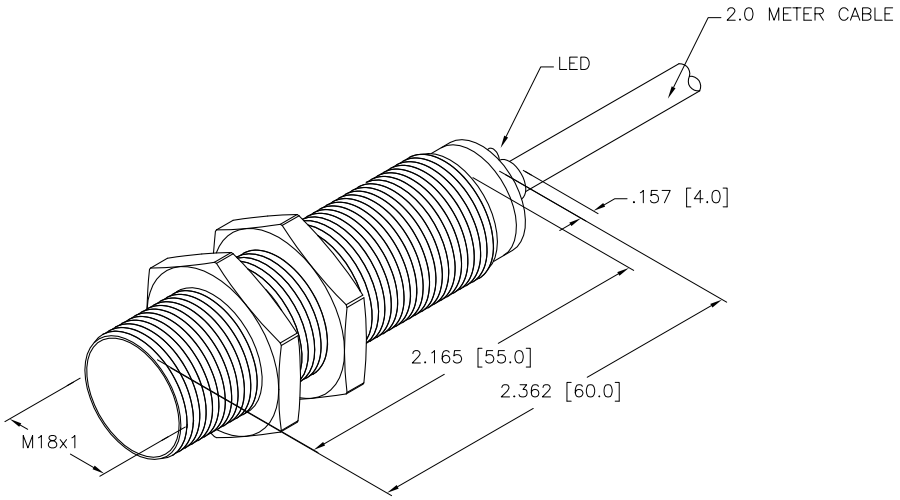

SPECIFICATIONS

OPERATING VOLTAGE	15–30 VDC
RIPPLE	≤ 10%
NO–LOAD CURRENT	≤ 8.0 mA
TARGET (MILD STEEL)	18 mm x 18 mm x 1
VOLTAGE OUTPUT	0–10 V/R_L ≧ 4.7 kΩ
CURRENT OUTPUT	0–20 mA/R_L ≦ 500Ω
LINEARITY TOLERANCE	±3% of FULL SCALE
TIME DELAY BEFORE AVAILABILITY	≤ 80 ms
REVERSE POLARITY PROTECTION	INCORPORATED
WIRE–BREAK PROTECTION	INCORPORATED
POWER–ON EFFECT PROTECTION	INCORPORATED
SHORT–CIRCUIT PROTECTED	YES
PROTECTION AGAINST TRANSIENTS	2 kV, 1ms, 1 kΩ
OPERATING TEMPERATURE	–10°C to +70°C (+14°F to +158°F)
ENCLOSURE	MEETS NEMA 1, 3, 4, 6, 13 AND IEC IP67
SHOCK	30 g, 11 ms
VIBRATION	55 Hz, 1 mm AMPLITUDE (IN ALL THREE PLANES)
SENSING RANGE (LINEAR PORTION)	2–4 mm = .079–.157"
REPEATABILITY	≤ 2% of FULL SCALE
EMBEDDABLE (SHIELDED)	YES
TEMPERATURE TOLERANCE	±5% of FULL SCALE
READING RATE FREQUENCY	200 Hz (10%–90% of FULL SCALE)

TYPICAL RESPONSE CURVE

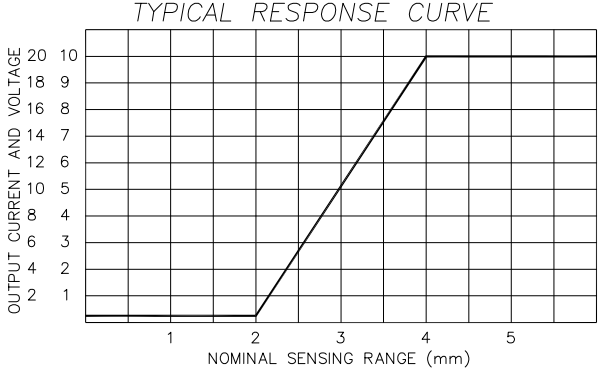

REV	DESCRIPTION	BY	DATE	ECO NO.
B	UPDATE TO CURRENT TITLEBLOCK	RDS	07/16/02	5504

RELATED DOCUMENTS
1.
2.
3.
4.

3RD ANGLE PROJECTION

THIS DRAWING IS PROPERTY OF TURCK INC. USE OF THIS DOCUMENT WITHOUT WRITTEN PERMISSION IS PROHIBITED.

TURCK INC
High Technology Sensors and Automation Controls
3000 CAMPUS DRIVE
MINNEAPOLIS, MN 55441
1–800–544–7769
(763) 553–7300
(763) 553–0708 fax
turck.com

MATERIAL
BRASS BARREL
END CAPS MADE OF ABS

FINISH
COPPER/NICKEL/
CHROME PLATING

ALL DIMENSIONS DISPLAYED ON THIS DRAWING ARE FOR REFERENCE ONLY

CONTACT TURCK FOR MORE INFORMATION

DRFT JMS | DATE 2/15/96
DSGN | SCALE 1=1.0

UNIT OF MEASUREMENT
INCH [MILLIMETER]
DO NOT SCALE THIS DRAWING

DESCRIPTION
Bi5–M18–LIU

IDENTIFICATION NO. M1536000 | REV B

FILE: M1536000 | SHEET 1 OF 1