SY 504 M

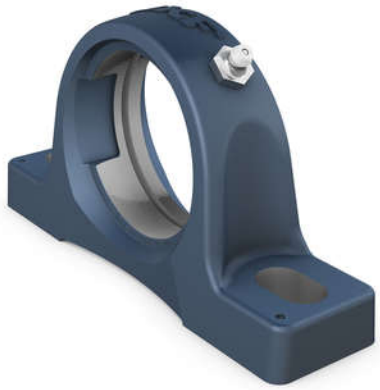

Pillow block housing for insert bearings, cast iron, ISO standards

Pillow (plummer) block housings are designed to accommodate an insert bearing. The cast iron housings are strong, stiff and cost-effective. They are suitable for most applications and can be bolted directly to a support surface.

- Accommodate heavy loads in different directions
- High degree of stiffness
- Narrow design

Overview

Dimensions

Centre distance between bolt holes	97 mm
Centre height (pillow block)	33.3 mm
Housing overall width	32 mm
Spherical seating diameter	47 mm

Properties

Coating	Without
Fastening bolt hole type	Plain
Housing type	Pillow block
Material, housing	Cast iron
Number of bolt holes for fasteners	2
Relubrication hole	With
Relubrication nipple	With

Technical Specification

Material	Cast iron

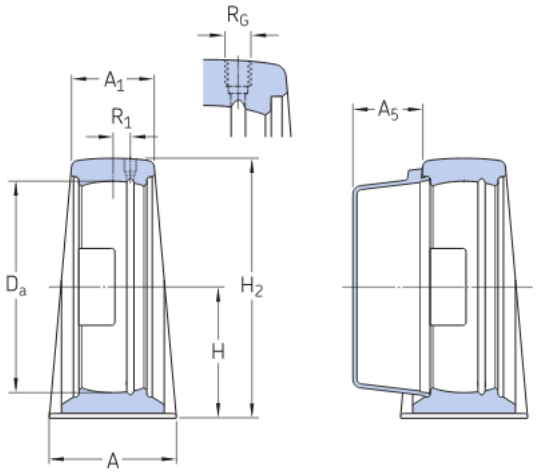

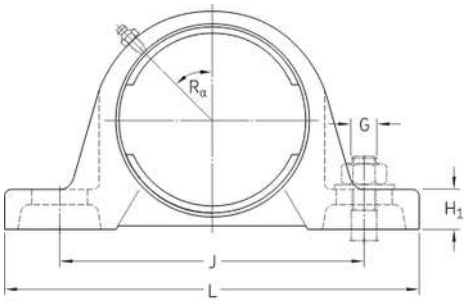

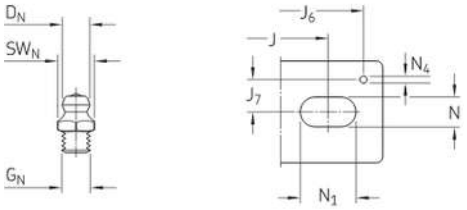

Dimensions

D_a	47 mm	Diameter of spherical seat
A	32 mm	Base width
A_1	21 mm	Top width
A_5	20.5 mm	Standout of end cover
H	33.3 mm	Height of spherical seat centre
H_1	14 mm	Foot height
H_2	64.5 mm	Overall height
J	97 mm	Distance between attachment bolts
J	max. 106 mm	Distance between attachment bolts
J	min. 88 mm	Distance between attachment bolts
L	127 mm	Overall length
N	11.5 mm	Width of attachment bolt hole
N_1	20.5 mm	Length of attachment bolt hole

Threaded hole

R_G	1/4-28 UNF	Housing thread for the grease fitting
R_1	2 mm	Axial position of the housing thread
R_o	45 °	Angular position of the housing thread

Grease fitting

D_1	6.5 mm	Diameter of head sphere of grease fitting
SW	7 mm	Hexagonal key size for the grease fitting
G_1	1/4-28 SAE-LT	Thread of the grease fitting

Dowel pins

J_6	118 mm	Distance between dowel pins
J_7	11.5 mm	Axial offset of dowel pins
N_L	2 mm	Recommended diameter for dowel pins

Mass

Mass housing	0.41 kg

Mounting information

Recommended diameter for attachment bolts, mm	G	10 mm
Recommended diameter for attachment bolts, inch	G	0.375 in

Associated products

End cover	ECY 204

Terms and conditions

By accessing and using this website / app owned and published by AB SKF (publ.) (556007-3495 · Gothenburg) ("SKF"), you agree to the following terms and conditions:

Warranty Disclaimer and Limitation of Liability

Although every care has been taken to assure the accuracy of the information on this website / app, SKF provides this information "AS IS" and DISCLAIMS ALL WARRANTIES, EXPRESS OR IMPLIED, INCLUDING, BUT NOT LIMITED TO, IMPLIED WARRANTIES OF MERCHANTABILITY AND FITNESS FOR A PARTICULAR PURPOSE. You acknowledge that your use of this website / app is at your sole risk, that you assume full responsibility for all costs associated with use of this website / app, and that SKF shall not be liable for any direct, incidental, consequential, or indirect damages of any kind arising out of your access to, or use of the information or software made available on this website / app. Any warranties and representations in this website / app for SKF products or services that you purchase or use will be subject to the agreed upon terms and conditions in the contract for such product or service. Further, for non-SKF websites / apps that are referenced in our website / app or where a hyperlink appears, SKF makes no warranties concerning the accuracy or reliability of the information in these websites / apps and assumes no responsibility for material created or published by third parties contained therein. In addition, SKF does not warrant that this website / app or these other linked websites / apps are free from viruses or other harmful elements.

Copyright

Copyright in this website / app copyright of the information and software made available on this website / app rest with SKF or its licensors. All rights are reserved. All licensed material will reference the licensor that has granted SKF the right to use the material. The information and software made available on this website / app may not be reproduced, duplicated, copied, transferred, distributed, stored, modified, downloaded or otherwise exploited for any commercial use without the prior written approval of SKF. However, it may be reproduced, stored and downloaded for use by individuals without prior written approval of SKF. Under no circumstances may this information or software be supplied to third parties.
This website /app includes certain images used under license from Shutterstock, Inc.

Trademarks and Patents

All trademarks, brand names, and corporate logos displayed on the website / app are the property of SKF or its licensors, and may not be used in any way without prior written approval by SKF. All licensed trademarks published on this website / app reference the licensor that has granted SKF the right to use the trademark. Access to this website / app does not grant to the user any license under any patents owned by or licensed to SKF.

Changes

SKF reserves the right to make changes or additions to this website / app at any time.