INSTALLATION INSTRUCTION

Handles

OH_S_



Label should be affixed to the rear mounting surface immediately adjacent the handle after installation.
OH_1: Type 1
OH_2: Type 1, 3R, 12

OH_S1P, OH_S2P, OH_S3P

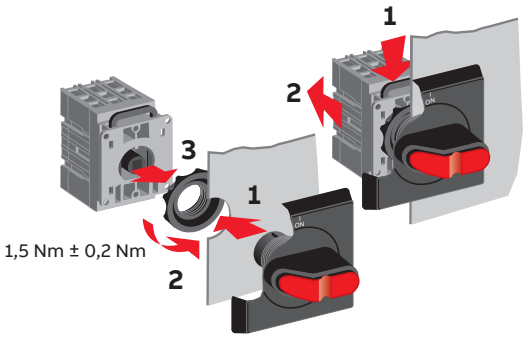

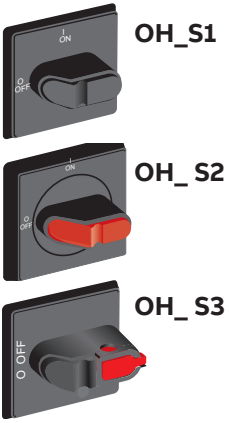

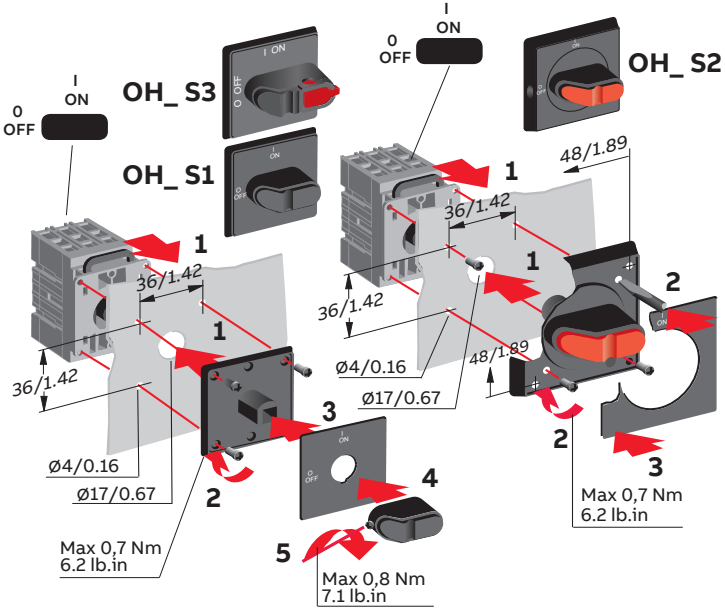

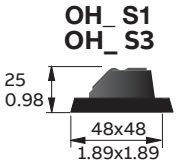

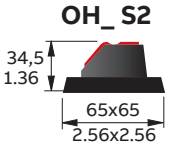

OH_S1R, OH_S2R, OH_S3R

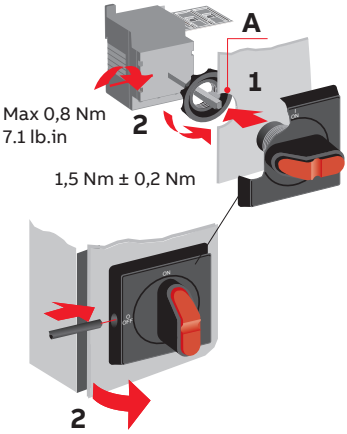

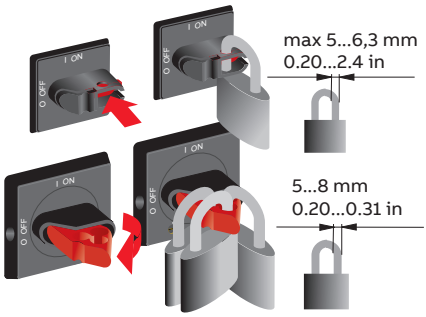

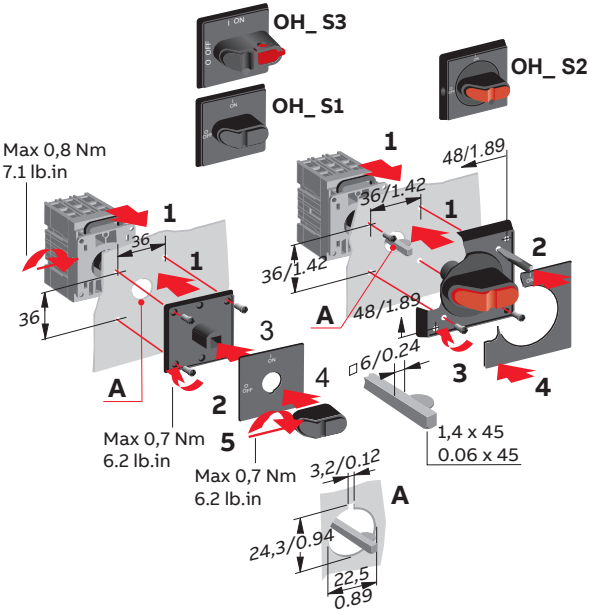

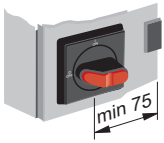

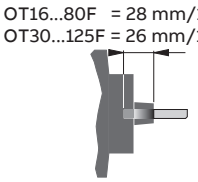

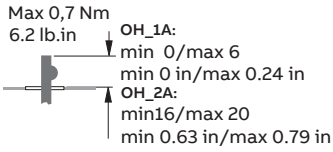

OH_S1A, OH_S3A

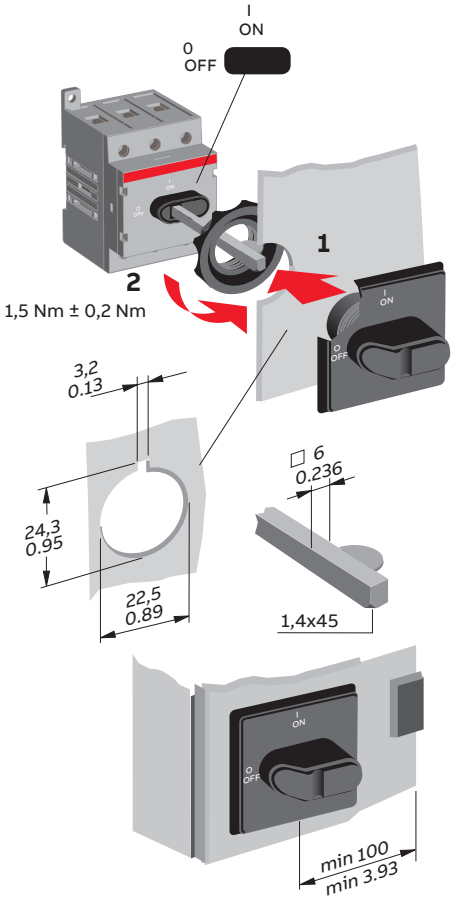
I
ON
0
OFF
1
2
1,5 Nm ± 0,2 Nm
3,2
0.13
24,3
0.95
22,5
0.89
□ 6
0.236
1,4x45
min 100
min 3.93

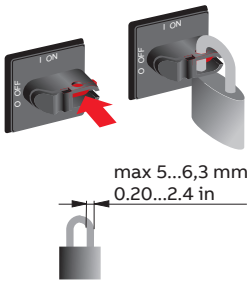
max 5...6,3 mm
0.20...2.4 in

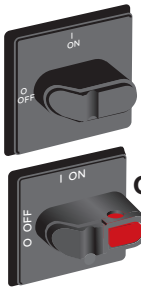
OH_S1AH1
OH_S3AH1

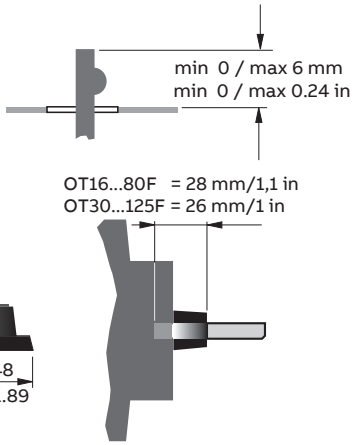
min 0 / max 6 mm
min 0 / max 0.24 in
OT16...80F = 28 mm/1,1 in
OT30...125F = 26 mm/1 in
25
0.98
48x48
1.89x1.89

OH_S2A

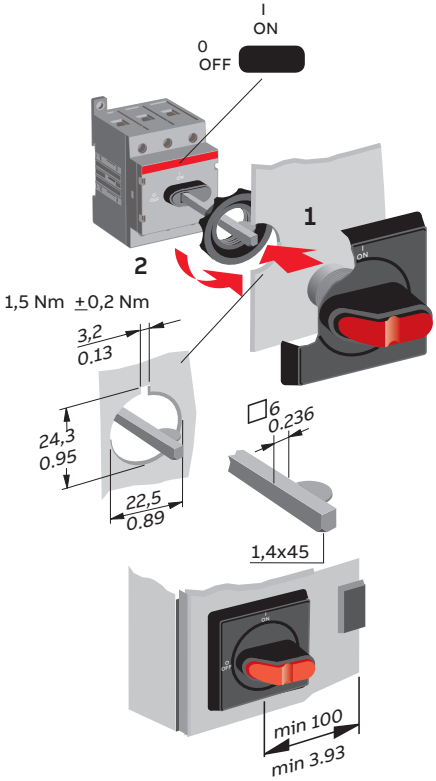
I
ON
0
OFF
1
2
1,5 Nm ±0,2 Nm
3,2
0.13
24,3
0.95
22,5
0.89
6
0.236
1,4x45
min 100
min 3.93

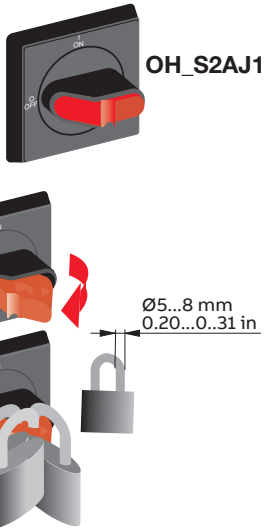
OH_S2AJ1
Ø5...8 mm
0.20...0..31 in

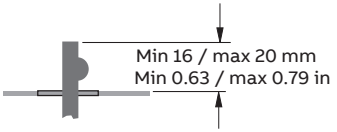
Min 16 / max 20 mm
Min 0.63 / max 0.79 in

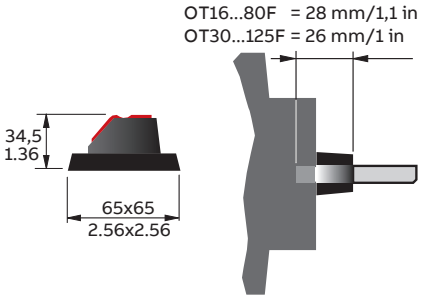
OT16...80F = 28 mm/1,1 in
OT30...125F = 26 mm/1 in
34,5
1.36
65x65
2.56x2.56

Contact us

ABB Oy
P.O. Box 622
FI-65101 Vaasa
Finland

abb.com/lowvoltage

© Copyright 2022 ABB. All rights reserved.
Specifications subject to change without notice.

34 OH_S1-2 rev. F / 1SCC390064M0004 # 22.02.2022