Field-Attachable Connectors

BCC M333-0000-20-000-13X350-000
Order Code: BCC0HLW

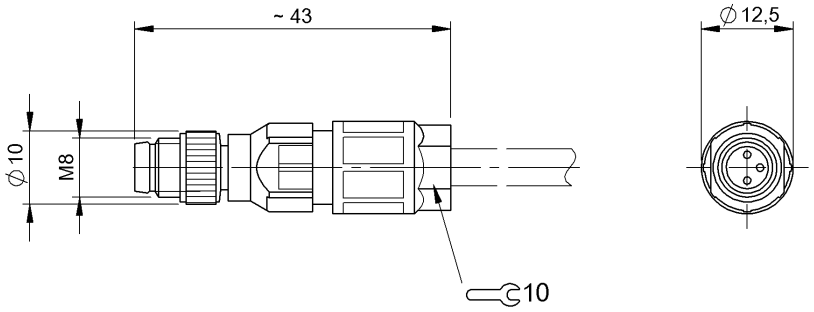

Basic features

Approval/Conformity	CE EAC WEEE

Electrical connection

Cable diameter D	2.5...5.2 mm
Connection	M8x1-Male, Straight, 3-pin, A-coded
Number of connectable contacts	3
System	Can be fabricated

Electrical data

Operating voltage Ub	60 VDC / 60 VAC
Rated current (40 °C)	4.0 A

Environmental conditions

Ambient temperature	-25...80 °C
IP rating	IP67

Material

Material contact carrier	PA
Material contacts	Bronze
Material cover nut	Die-cast zinc
Material grip	PA

Mechanical data

Connection cross-section	0.25...0.5 mm²
Tightening torque pigtail	0.6 Nm
Type of wire mounting	IDC

Remarks

Enclosure rating per IEC 60529, only in screwed state with the associated mating piece.

Connector Drawings

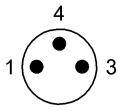

PIN 1-3 usable