BES 18,0-KB-5-F
Order Code: BAM00FE

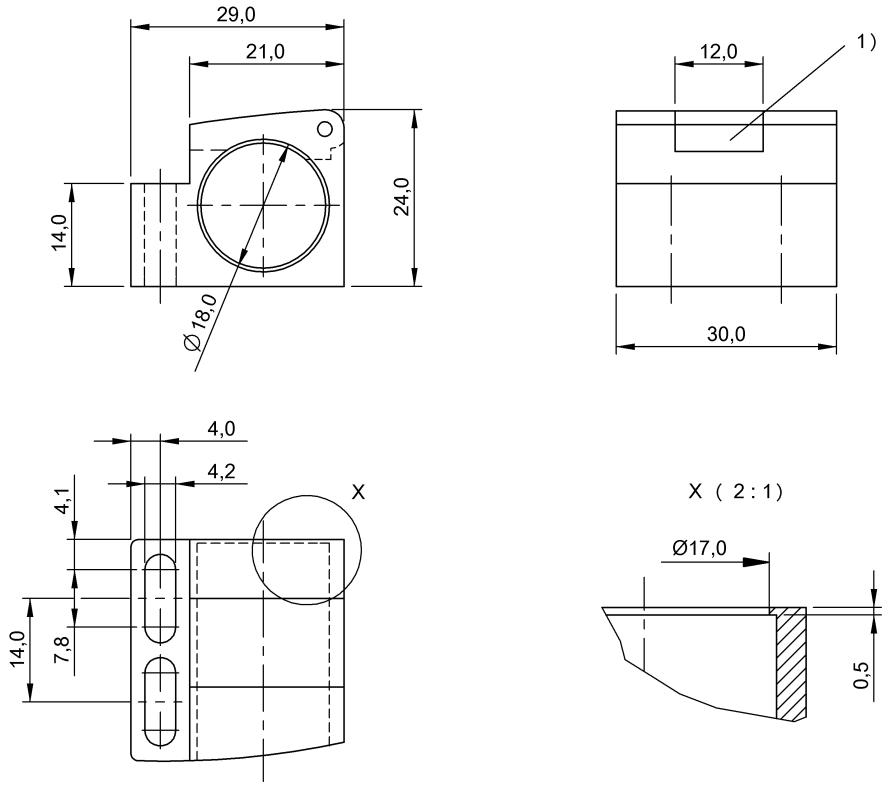

1) Mechanical closing system

Basic features

Principle of operation	Clamp holder
Use	for sensors Ø18 mm For M18 sensors
Version	Mounting clamp with positive stop

Material

Material	PC

Mechanical data

Dimension	30 x 24 x 29 mm
Mounting part	Clamps

Remarks

The proximity switch is inserted into the clamp holder up to the fixed stop and secured using the clamping lever.