Brand of NTN corporation

Technical data

USPAE212

Bearing units



Grey cast housing, radial insert ball bearing with socket set screws, single lip seal

KIT CONTENT

US212G2, PAE212

VISUAL (S)

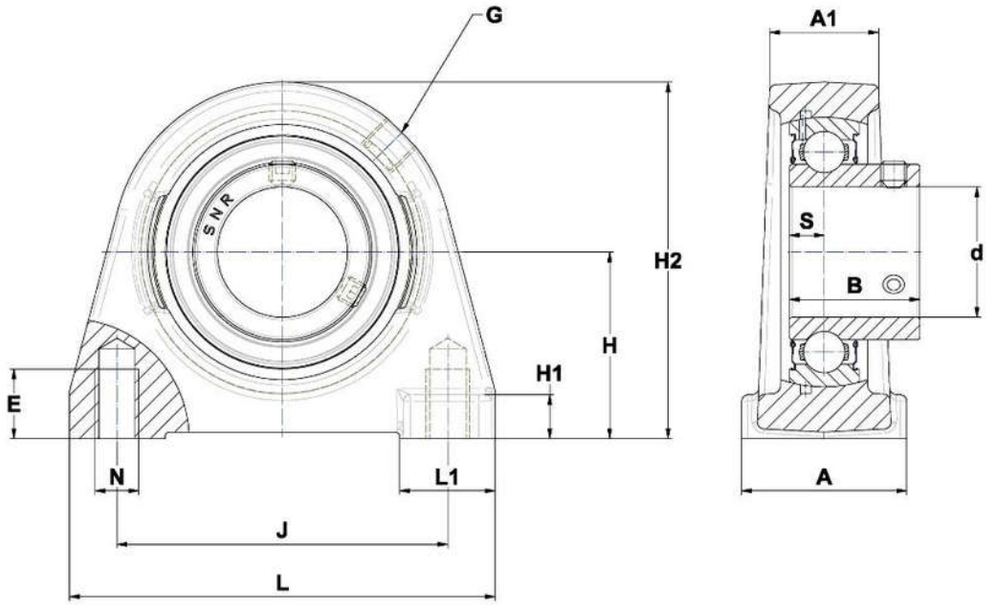

PRODUCT DEFINITION

Brand	SNR
A - Housing width	60 mm
A1 - Housing top width	42 mm
B - Width of Inner Ring	53,7 mm
d - Shaft diameter	60 mm
E - Mounting hole thread depth	20 mm

PRODUCT DEFINITION	
G - Grease fitting	R1/8"
H - Distance mounting base to centerline spheric. seating diam.	69,9 mm
H1 - Housing foot height	16 mm
H2 - Housing height	140 mm
J - Mounting holes distance	118 mm
L - Housing length	150 mm
L1 - Housing foot length	32 mm
N - Mounting hole dimension	M16
S - Distance front side/bearing centre	14,9 mm

PRODUCT PERFORMANCE	
C - Dynamic load rating	52500000 mN
C0 - Static load rating	32800000 mN
Operating temperature min.	253,15 °K
Operating temperature max.	373,15 °K

OTHER FEATURES	
Mass	4 kg
Recommended tightening torque for set screw	22 N-m