Lovato electric

ENERGY AND AUTOMATION

RFE45.... DATASHEET



Order code	Adjustment range	Protection fuses IEC aM	gG	UL Class T	Qty per pkg	Wt
	[A]	[A]	[A]	[A]	n°	[kg]
MANUAL OR AUTOMATIC RESETTING. Direct mounting on BF09...BF38 contactors. Independent mounting with RFX38 04.						
RFE45 0200	0.4...2	4	6	125	1	0.195
RFE45 0800	1.6...8	10	20	125	1	0.195
RFE45 3200	6.4...32	40	63	125	1	0.195
MANUAL OR AUTOMATIC RESETTING. Independent mounting.						
RFE110 110	22...110	125	200	300	1	0.610

General characteristics

The RFE... electronic thermal overload relays for BF series contactors are characterized by a wide current adjustment range and high reliability and accuracy of tripping. They are self powered by the main circuit current and therefore do not require separate auxiliary supply voltage. RFE electronic thermal overload relays are suitable for all types of motor starting thanks to the possibility to select several tripping classes. A single front push button is used to select the reset function, manual or automatic, and to activate or deactivate the STOP function.

Operational characteristics

- IEC power circuit rated insulation voltage Ui: 1000V
- IEC auxiliary circuit rated insulation voltage Ui: 690V
- rated impulse withstand voltage: 8kV
- rated frequency: 50/60Hz
- maximum rated current: 32A for RFE45, 110A for RFE110
- heat dissipation per phase: <1W
- selectable tripping classes: 5-10-20-30
- phase failure sensitive
- mounting position: any
- sealable current adjuster and dip switches for tripping class selection
- degree of protection: IP20 on front.

Certifications and compliance

Certifications obtained: cULus.
Compliant with standards: IEC/EN 60947-1; IEC/EN 60947-4-1, UL 60947-1, UL 60947-4-1, CSA C22.2 n° 60947-1, CSA C22.2 n° 60947-4-1.

RFE45

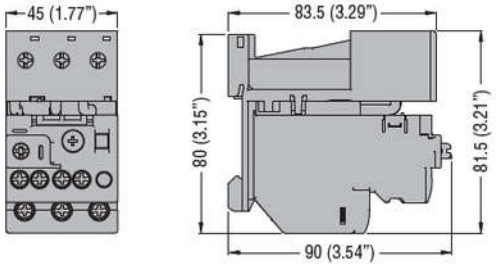

RFE110

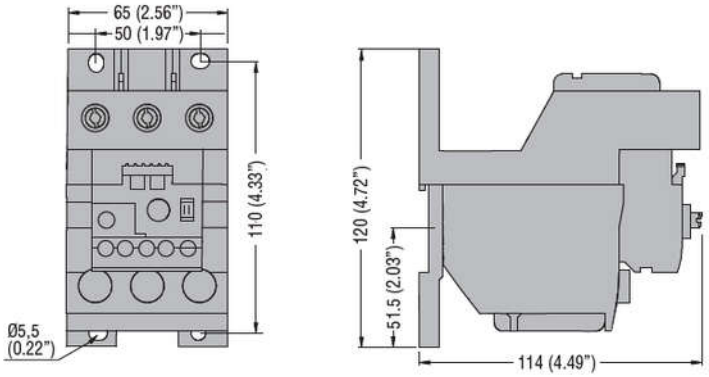

RFE45 - RFE110

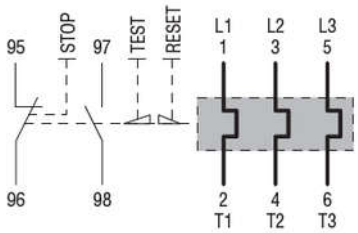

Lovato electric

ENERGY AND AUTOMATION

Phase failure/single phase sensitive manual reset Phase failure sensitive automatic reset Non phase failure/non single phase sensitive manual reset Non phase failure/non single phase sensitive automatic reset			RF9 RFA9 RFN9 RFNA9	RF38❶ RFN38❶	RF82-RF110 RFA82-RFA110 RFN82-RFN110 RFNA82-RFNA110	RFE45	RFE110	RF200❶ RFN200❶	RF420❶ RFN420❶
POWER CIRCUIT CHARACTERISTICS									
IEC rated insulation voltage Ui		V	690	690	690	1000	1000	1000	1000
IEC rated impulse withstand voltage Uimp		kV	8	6	8	6	6	6	6
Frequency limit		Hz	0...400	0...400	0...400	50...60	50...60	50...60	50...60
Operational range	from	A	0.09	0.1	14	0.4	22	60	150
	to	A	15	38	82	32	110	200	420 ❷
Tripping class			10A			5-10-20-30		10A	
Particular characteristics			Test button - Trip indicator						
Connection			Direct			With current transformers ❸			
Terminals	Type		Screw and washer		Yoke clamp	Screw and washer	Yoke clamp	Screw and flat washer	
	Screw		M4	M4	M5	M4	M6	M8	M10
	Terminal width	mm	9.8	12.6	9	12	9	20	25
	Phillips	n°	2	2	2	2	4❻	13mm❹	18mm❹
Tightening torque for power terminals		Nm	2.3	2...2.5	3.9	3.1	9	18	35
		lbft	1.7	1.5...1.8	2.88	2.3	6.6	13.3	25.9
Maximum conductor section connectable									
	AWG	N°	10	8	2	6	1/0	–	–
	Flexible w/o lug	mm²	6	10	35	10	16	–	–
	Flexible c/w lug	mm²	10	6	–	10	16	150	2 x 150
	Bar	mm	–	–	–	–	–	25 x 3	30 x 5
Dissipation per phase		W	0.7...2.4	0.7...2.4	2.0...4.2	<1	<1	0.7...2.4	0.7...2.4
AUXILIARY CIRCUIT CHARACTERISTICS									
Available contacts	NO	N°	1						
	NC	N°	1						
IEC rated insulation voltage		V	690						
IEC conventional free air thermal current Ith		A	10			5		10	
Terminals with screw and washer	Screw		M3.5						
	Terminal width	mm	8			7		8	
	Phillips	n°	1	2	1	2	2	2	2
Maximum conductor section connectable									
	Flexible w/o lug	mm²	2.5						
	Flexible c/w lug	mm²	2.5						
Tightening torque for auxiliary terminals		Nm	1	0.8...1	1	0.8	0.8	0.8...1	0.8...1
		lbft	0.74	0.59...0.74	0.74	0.6	0.6	0.59...0.74	0.59...0.74
UL/CSA and IEC/EN 60947-5-1 designation			B600-P600 ❺	B600-R300	B600-P600 ❺	B600-R300	B600-R300	B600-R300	B600-R300
AMBIENT CONDITIONS									
Operating temperature		°C	-20...+55	-25...+60	-20...+55	-25...+70	-25...+70	-25...+60	-25...+60
Storage temperature		°C	-55...+70	-50...+70	-55...+70	-55...+80	-55...+80	-50...+70	-50...+70
Compensation temperature		°C	-15...+55	-20...+60	-15...+55	-25...+70	-25...+70	-20...+60	-20...+60
Maximum altitude		m	3000						
Operation position	normal		On vertical plane						
	Allowable		±30°						
Mounting			On contactor or separately (RFE110 separately only)						

❶ With manual and automatic resetting.
❷ For currents higher than 420A, consult Technical support for information; see contact details on inside front cover.
❸ Standard supplied.
❹ Metric wrench/spanner.
❺ C600-R300 for automatic reset type.

Lovato electric

ENERGY AND AUTOMATION

TRIP CHARACTERISTIC FOR RFE ELECTRONIC THERMAL OVERLOAD RELAYS

Three-phase balanced operation; class 5

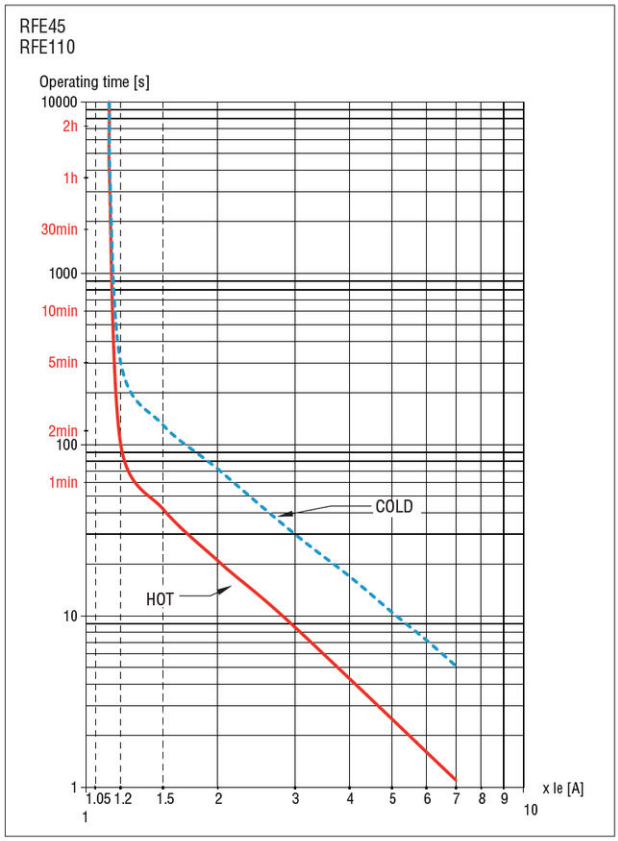

Three-phase balanced operation; class 10

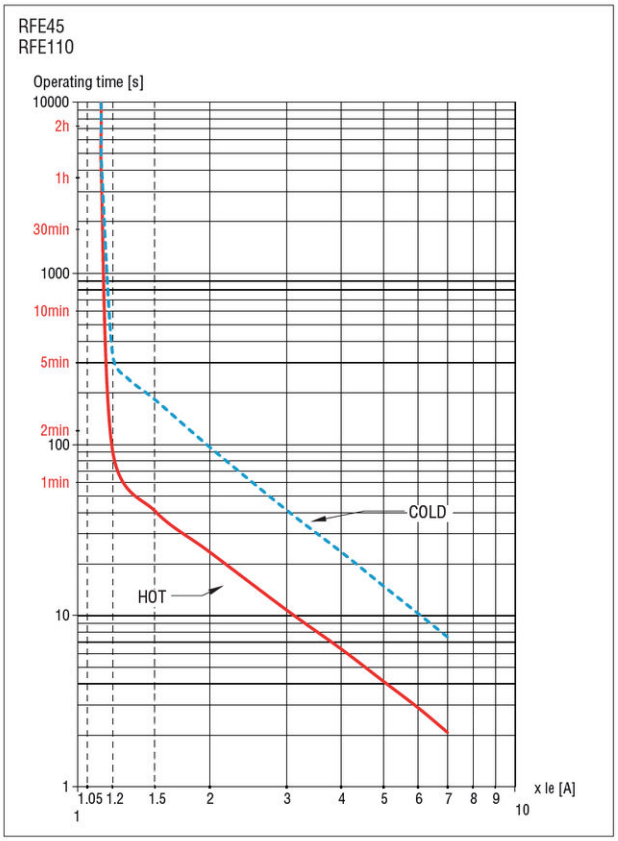

Three-phase balanced operation; class 20

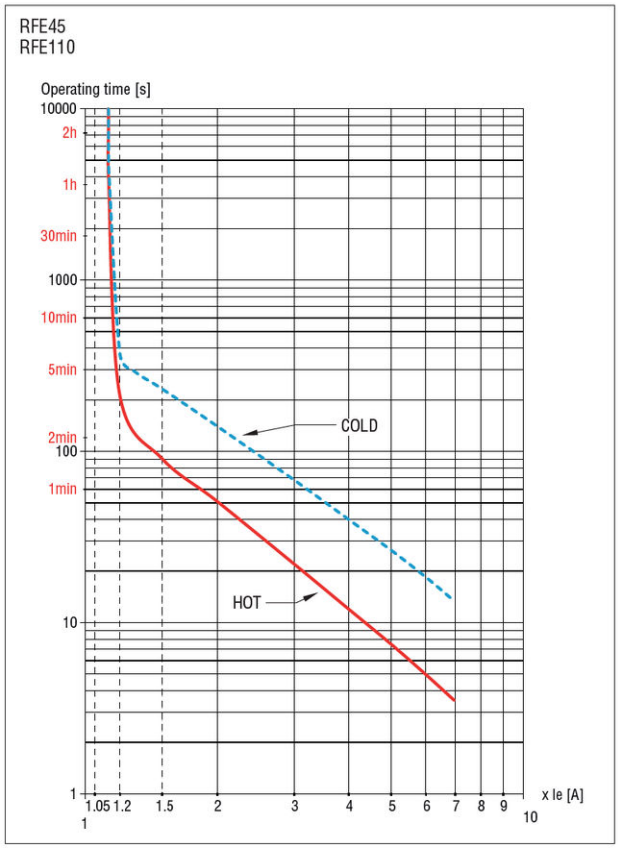

Three-phase balanced operation; class 30

