BF4000A12060

THREE-POLE CONTACTOR, IEC OPERATING CURRENT IE (AC3) = 40A, AC COIL 60HZ, 120VAC



Product designation			Power contactor
Product type designation			BF40
Contact characteristics			
Number of poles		Nr.	3
Rated insulation voltage Ui IEC/EN		V	1000
Rated impulse withstand voltage Uimp		kV	8
Operational frequency			
	min	Hz	25
	max	Hz	400
IEC Conventional free air thermal current Ith		A	70
Operational current Ie			
	AC-1 (≤40°C)	A	70
	AC-1 (≤55°C)	A	60
	AC-1 (≤70°C)	A	50
	AC-3 (≤440V ≤55°C)	A	40
	AC-4 (400V)	A	24
Rated operational power AC-3 (T≤55°C)			
	230V	kW	11
	400V	kW	18.5
	415V	kW	22
	440V	kW	22
	500V	kW	22
	690V	kW	30
	1000V	kW	18.5
Rated operational power AC-1 (T≤40°C)			
	230V	kW	26
	400V	kW	46
	500V	kW	58
	690V	kW	79
IEC max current Ie in DC1 with L/R ≤ 1ms with 1 poles in series			
	≤24V	A	40
	48V	A	35
	75V	A	30
	110V	A	8
	220V	A	–
IEC max current Ie in DC1 with L/R ≤ 1ms with 2 poles in series			
	≤24V	A	48
	48V	A	48
	75V	A	45
	110V	A	42
	220V	A	5
IEC max current Ie in DC1 with L/R ≤ 1ms with 3 poles in series			
	≤24V	A	48
	48V	A	48
	75V	A	48

The characteristics described in this document are subject to updates or modifications at any time. The descriptions, technical and functional information, illustrations and instructions in this brochure are purely illustrative, and are consequently not contractually binding

	110V	A	44
	220V	A	56
IEC max current Ie in DC1 with L/R ≤ 1ms with 4 poles in series			
	≤24V	A	–
	48V	A	–
	75V	A	–
	110V	A	–
	220V	A	70
IEC max current Ie in DC3-DC5 with L/R ≤ 15ms with 1 poles in series			
	≤24V	A	27
	48V	A	23
	75V	A	19
	110V	A	3
	220V	A	–
IEC max current Ie in DC3-DC5 with L/R ≤ 15ms with 2 poles in series			
	≤24V	A	32
	48V	A	30
	75V	A	27
	110V	A	22
	220V	A	5
IEC max current Ie in DC3-DC5 with L/R ≤ 15ms with 3 poles in series			
	≤24V	A	40
	48V	A	40
	75V	A	38
	110V	A	27
	220V	A	32
IEC max current Ie in DC3-DC5 with L/R ≤ 15ms with 4 poles in series			
	≤24V	A	–
	48V	A	–
	75V	A	–
	110V	A	–
	220V	A	40
Short-time allowable current for 10s (IEC/EN60947-1)		A	400
Protection fuse			
	gG (IEC)	A	100
	aM (IEC)	A	50
Making capacity (RMS value)		A	400
Breaking capacity at voltage			
	440V	A	320
	500V	A	265
	690V	A	256
Resistance per pole (average value)		mΩ	0.8
Power dissipation per pole (average value)			
	Ith	W	3.9
	AC3	W	1.3
Tightening torque for terminals			
	min	Nm	4
	max	Nm	5
	min	lbin	2.95
	max	lbin	3.69
Tightening torque for coil terminal			
	min	Nm	0.8
	max	Nm	1

The characteristics described in this document are subject to updates or modifications at any time. The descriptions, technical and functional information, illustrations and instructions in this brochure are purely illustrative, and are consequently not contractually binding

		min	Ibin	0.8
		max	Ibin	0.74
Max number of wires simultaneously connectable			Nr.	2
Conductor section				
	AWG/Kcmil			
		max		2
	Flexible w/o lug conductor section			
		min	mm²	1.5
		max	mm²	35
	Flexible c/w lug conductor section			
		min	mm²	1.5
		max	mm²	35
Power terminal protection according to IEC/EN 60529				IP20 front
Mechanical features				
Operating position				
		normal		Vertical plan
		allowable		±30°
Fixing				Screw / DIN rail 35mm
Weight			g	1020
Conductor section				
	AWG/kcmil conductor section			
		max		2
Operations				
Mechanical life			cycles	15000000
Electrical life			cycles	1500000
Safety related data				
Performance level B10d according to EN/ISO 13489-1				
		rated load	cycles	1500000
		mechanical load	cycles	15000000
Mirror contats according to IEC/EN 609474-4-1				yes
EMC compatibility				yes
AC coil operating				
Rated AC voltage at 60Hz			V	120
AC operating voltage				
	of 60Hz coil powered at 60Hz			
		pick-up		
			min	%Us 80
			max	%Us 110
		drop-out		
			min	%Us 20
			max	%Us 55
AC average coil consumption at 20°C				
	of 60Hz coil powered at 60Hz			
			in-rush	VA 210
			holding	VA 15
Dissipation at holding ≤20°C 50Hz			W	5
Max cycles frequency				
Mechanical operation			cycles/h	3600
Operating times				
Average time for Us control				
	in AC			
		Closing NO		

The characteristics described in this document are subject to updates or modifications at any time. The descriptions, technical and functional information, illustrations and instructions in this brochure are purely illustrative, and are consequently not contractually binding

			min	ms	12
			max	ms	28
		Opening NO			
			min	ms	8
			max	ms	22
	in DC				
		Closing NO			
			min	ms	40
			max	ms	85
		Opening NO			
			min	ms	20
			max	ms	55
UL technical data					
Full-load current (FLA) for three-phase AC motor					
			at 480V	A	40
			at 600V	A	32
Yielded mechanical performance					
	for single-phase AC motor				
			110/120V	HP	3
			230V	HP	7.5
	for three-phase AC motor				
			200/208V	HP	10
			220/230V	HP	15
			460/480V	HP	30
			575/600V	HP	30
General USE					
	Contactor				
			AC current	A	70
Short-circuit protection fuse, 600V					
	High fault				
			Short circuit current	kA	100
			Fuse rating	A	150
			Fuse class		J
	Standard fault				
			Short circuit current	kA	5
			Fuse rating	A	150
			Fuse class		RK5
Ambient conditions					
Temperature					
	Operating temperature				
			min	°C	-50
			max	°C	70
	Storage temperature				
			min	°C	-60
			max	°C	80
Max altitude				m	3000
Resistance & Protection					
Pollution degree					3
Dimensions					

The characteristics described in this document are subject to updates or modifications at any time. The descriptions, technical and functional information, illustrations and instructions in this brochure are purely illustrative, and are consequently not contractually binding

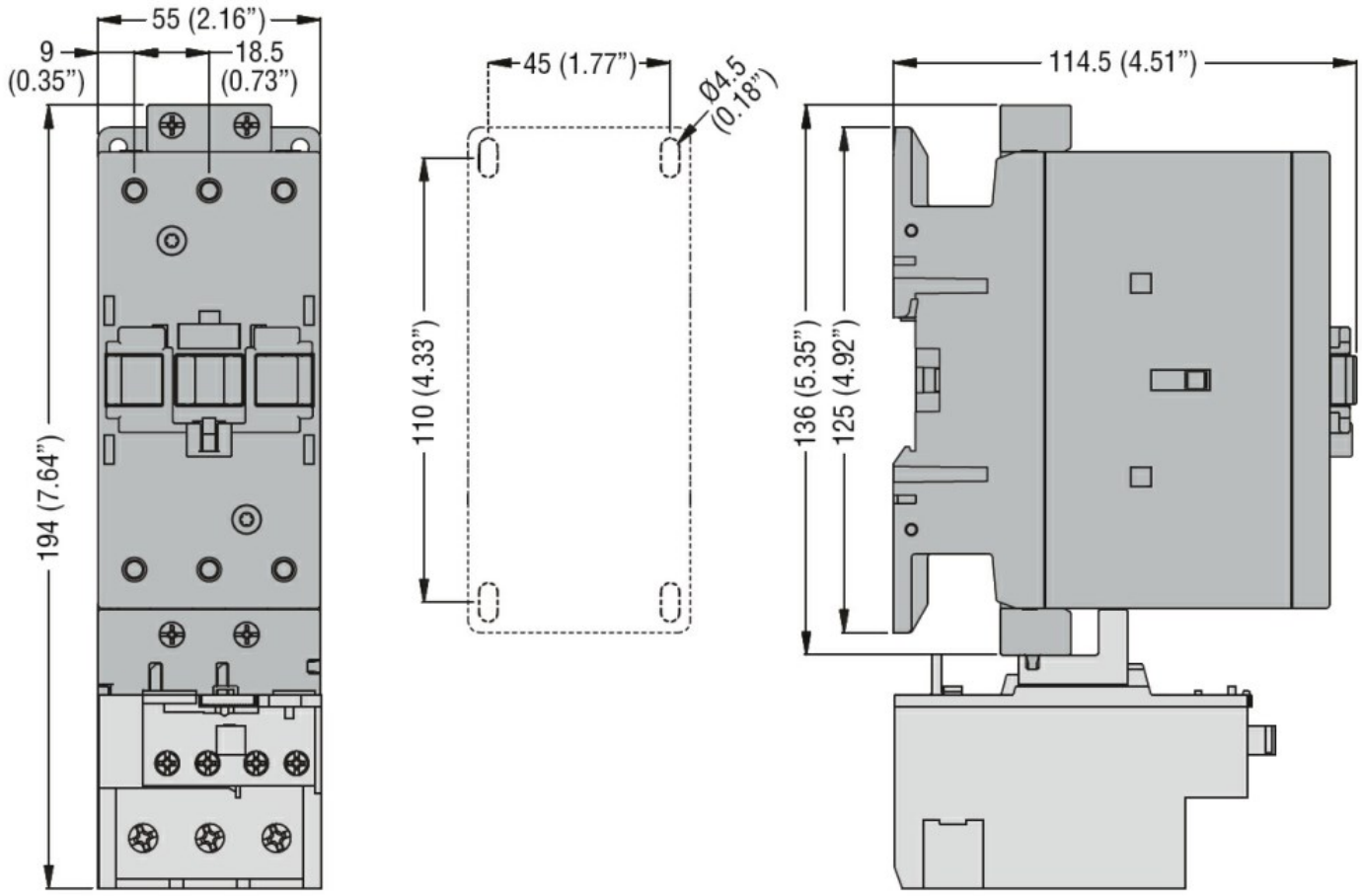

Wiring diagrams

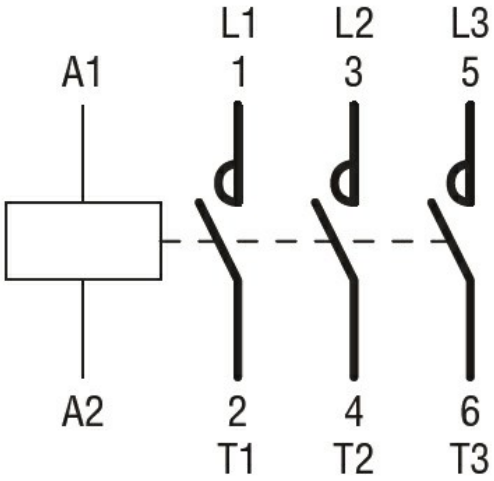

Certifications and compliance

Compliance

CSA C22.2 n° 60947-1
CSA C22.2 n° 60947-4-1
IEC/EN/BS 60947-1
IEC/EN/BS 60947-4-1
UL 60947-1
UL 60947-4-1

Certificates

CCC

The characteristics described in this document are subject to updates or modifications at any time. The descriptions, technical and functional information, illustrations and instructions in this brochure are purely illustrative, and are consequently not contractually binding

cULus

ETIM classification

ETIM 8.0	EC000066 - Power contactor, AC switching

The characteristics described in this document are subject to updates or modifications at any time. The descriptions, technical and functional information, illustrations and instructions in this brochure are purely illustrative, and are consequently not contractually binding