# PSENbolt
## PSEN b1

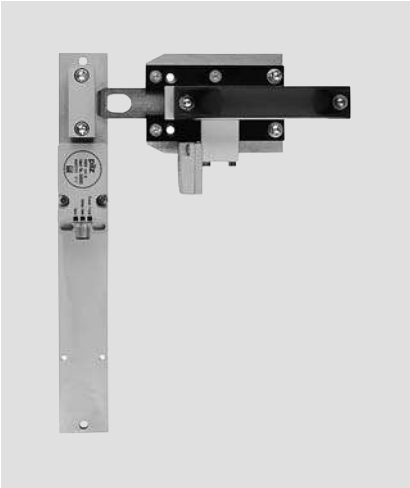

Bolt for mechanical guard locking on movable protective devices in accordance with EN ISO 12100-2 and EN 1008 in conjunction with the safety switches PSENmech or PSENcode.

**Approvals**

**Unit features**

The bolt can only be used as an interlock in conjunction with a safety switch of type PSENcode or PSENmech.

- The bolt can be used with the following safety switches:

**PSENcode**
Non-contact magnetic coded safety switch

- PSEN cs1.1p
- PSEN cs2.1p
- PSEN cs2.2p
- PSEN cs1.13p ATEX
- PSEN cs2.13p ATEX

**PSENmech**
Mechanical safety switch with separate actuator and guard locking device

- PSEN me1

**Unit description**

The bolt is used for mechanical guard locking in accordance with EN ISO 12100-2 and EN 1088. It is designed for use as an interlock in conjunction with a PSENcode or PSENmech safety switch.

- The bolt may **not** be used on its own as a safety component to avoid hazardous plant or machine statuses.
- The bolt is suitable for right and left hinged gates.
- A padlock may also be installed on the bolt slot in order to prevent unauthorised opening and closing of the bolt.
- The bolt is suitable for installing on standard aluminium profiles and machine enclosures.

The bolt consists of

- a gate plate including bolt and handle, which is attached to the safety gate
  and
- a frame plate, which is attached to the safety gate frame

**Function description**

The PSENcode or PSENmech type actuator is installed on the gate plate using an adapter; the corresponding safety switch is installed on the frame plate. If the operator opens the safety gate, the safety switch is actuated simultaneously.



Pilz GmbH & Co. KG, Sichere Automation, Felix-Wankel-Straße 2, 73760 Ostfildern, Germany
Telephone: +49 711 3409-0, Telefax: +49 711 3409-133, E-Mail: pilz.gmbh@pilz.de

# PSENbolt
## PSEN b1

**Installation**

**CAUTION!**
Do not install the bolt until you have read and understood the operating instructions for the safety switches PSENcode or PSENmech! Pay particular attention to the information on operating distances and installation. The technical details must be adhered to.

**Installing the actuator**
- Install the actuator on to the adapter.
- Install the adapter on to the actuator using the two M4 screws on the gate plate.

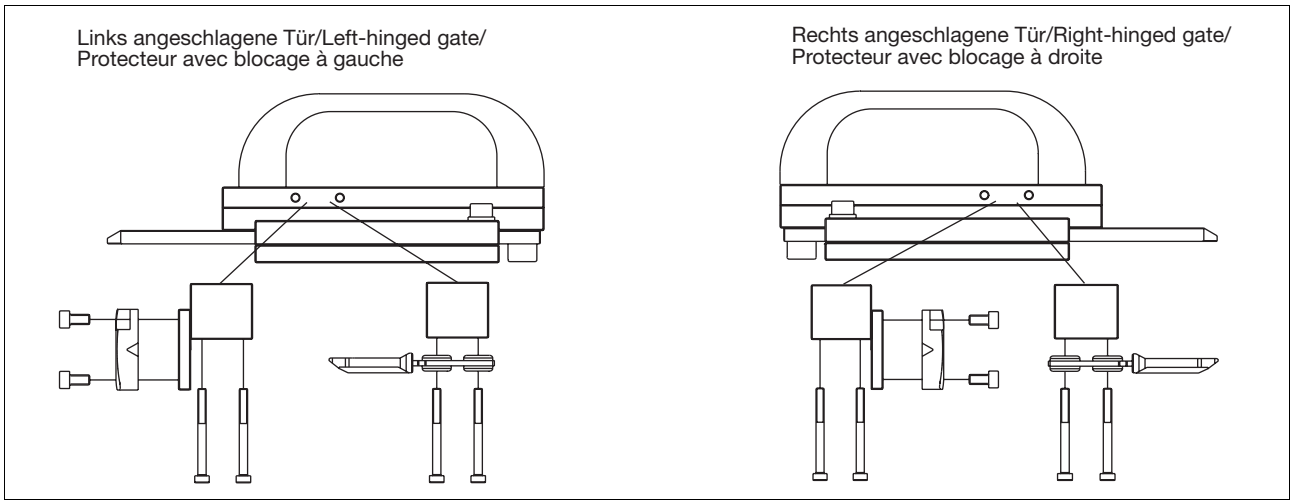


**Installing the safety switch**

Install the safety switch using the screws (M6) on the frame plate.

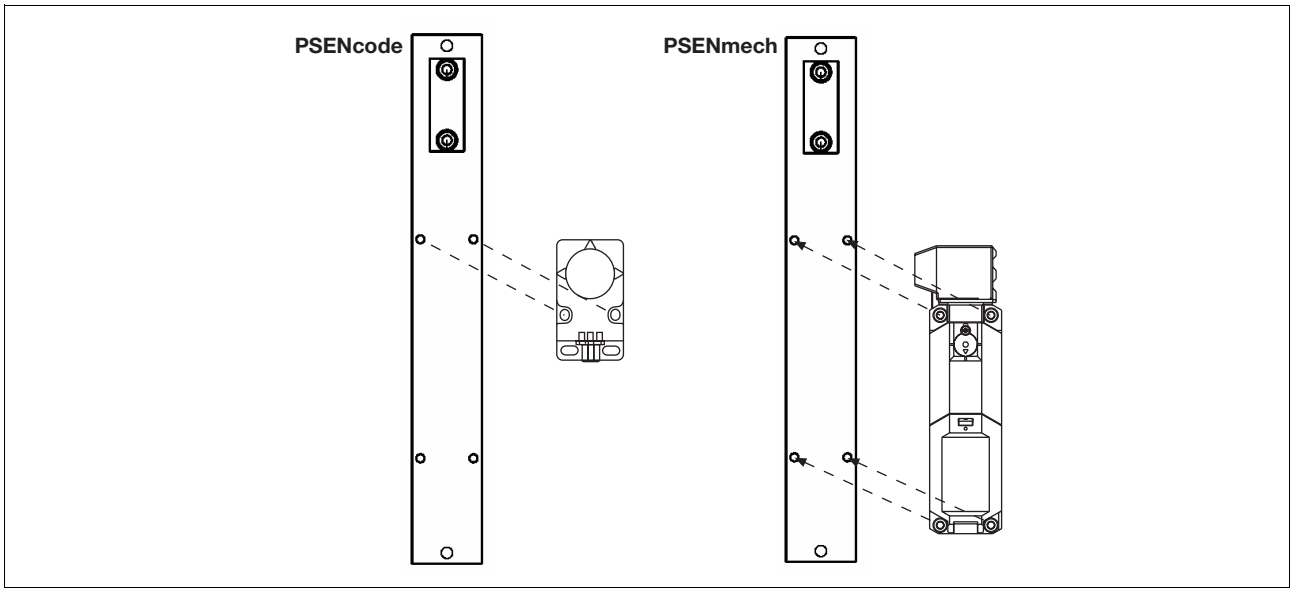


**INFORMATION**
Please note the following when installing the PSENmech safety switch:
The actuator should be aligned for a left or right hinged gate prior to installation!



Pilz GmbH & Co. KG, Sichere Automation, Felix-Wankel-Straße 2, 73760 Ostfildern, Germany
Telephone: +49 711 3409-0, Telefax: +49 711 3409-133, E-Mail: pilz.gmbh@pilz.de

# PSENbolt
## PSEN b1

**Installing the gate plate and frame plate**

**INFORMATION**
Installation is only possible when the bolt is open!
During installation make sure that:

- The installation surface on the gate and gate frame is flat.
- The gate plate and frame plate are installed level with the top edge.

**Dimensions**

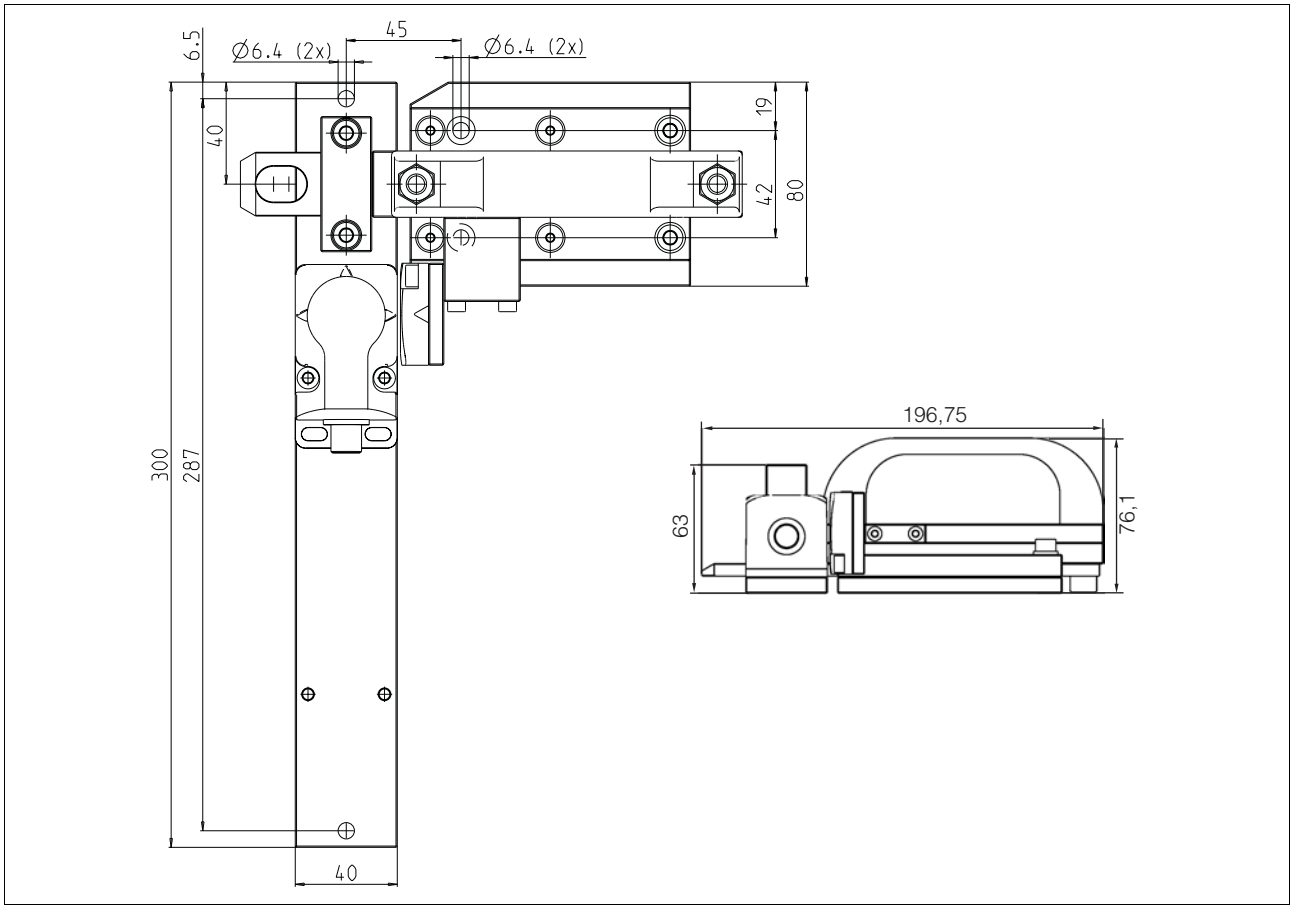


**Technical details**

| | |
|---|---|
| Material | Aluminium, galvanised steel, plastic |
| Dimensions L x W x H | 300 x 196 x 76.1 mm |
| Weight | 1220 g |

**Order reference**

| Type | Quantity | Operation | Features | Order no. |
|---|---|---|---|---|
| PSEN b1 | 1 | Mechanical | Bolt | 540 010 |



Pilz GmbH & Co. KG, Sichere Automation, Felix-Wankel-Straße 2, 73760 Ostfildern, Germany
Telephone: +49 711 3409-0, Telefax: +49 711 3409-133, E-Mail: pilz.gmbh@pilz.de