Lovato

Control stations PLatinum series







1 Gang Plastic Enclosure Grey Cover	
S1P 10	Standard Green PB "I" (START) c/w 1NO contact
S1P 01	Standard Red PB "O" (STOP) c/w 1NC contact
1 Gang Plastic Enclosure Yellow Cover	
S1P Y91	40mm Mushroom Twist Reset (EMERGENCY STOP) c/w 1NC contact
S1P Y91P	40mm Mushroom Pull Reset (EMERGENCY STOP) c/w 1NC contact
S1P Y91KS	40mm Mushroom Key Reset (EMERGENCY STOP) c/w 1NC contact
2 Gang Plastic Enclosure Grey Cover	
S2P 1001	Standard Green "I" PB's (START/STOP) c/w 1NO & 1NC contacts

S1P...

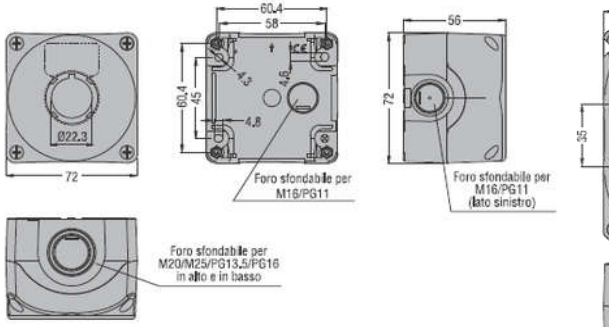

S2P...

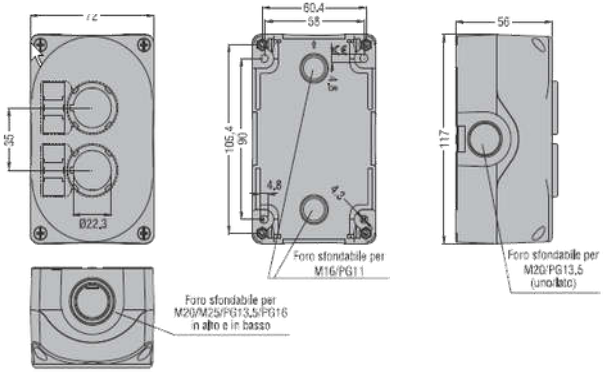

S1PY...

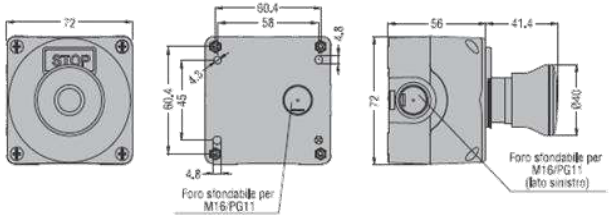

General characteristics

CONTROL STATIONS WITHOUT ACTUATOR
- 1 to 6 cutouts
- Compact dimensions
- Easy wiring for base-mount contacts and lamp holders (see the following page); possible use of screw and spring-clamp terminal contacts or lamp holders on the inside surface of the cover using LPX AU120 mounting adapter
- Numerous cable entries.

CONTROL STATIONS WITH ACTUATOR
Standard supplied with actuator, label holder, STOP legend label, excluding types with yellow cover, and one base-mount NC contact.

Operational characteristics

- Cable entry:
  - LPZ P1... knockouts:
    - M16/PG11 (1 at rear and 1 on left side)
    - M20/M25/PG13.5/M20 (1 on top and 1 at bottom)
  - LPZ P2 A8 knockouts:
    - M16/PG11 (2 at rear)
    - M20/PG13.5 (1 on each side)
    - M20/M25/PG13.5/M20 (1 on top and 1 at bottom)
  - LPZ P3/P4/P5/P6 A8 knockouts:
    - M16/PG11 (2 at rear)
    - M20/PG13.5 (2 on each side)
    - M20/M25/PG13.5/M20 (1 on top and 1 at bottom)
- Any mounting position is allowed.
- Tightening torque of cover screws Tmax: 1.6Nm/14lbin
- Ambient conditions:
  - Operating temperature: -25...+70°C
  - Storage temperature: -40...+85°C
- Degree of protection:
  - Per IEC/EN: IP66, IP67 and IP69K
  - Per UL/CSA: Type 1, 2, 3R, 4 4X, 12, 12K.

Materials

Polycarbonate.

Certifications and compliance

Certifications pending completion: cULus, CCC, RINA, GOST.
Compliant with standards: IEC/EN 60947-1, IEC/EN 60947-5-1, UL508A for types without actuators / UL508 for types complete with actuator, CSA C22.2 n° 14.