MURR ELEKTRONIK
stay connected

MSUD valve plug A-18mm with cable

PVC 3x0.75 bk 1.5m

Form A (18 mm)
24 V AC/DC ±25%
LED
Further cable lengths on request.
Plastic housings with good resistance against chemicals and oils.
The resistance to aggressive media should be individually tested for your application. Further details on request.

Link to Product

Illustration



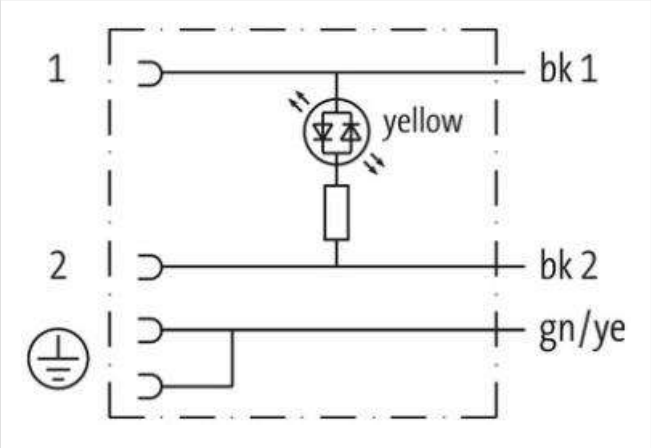

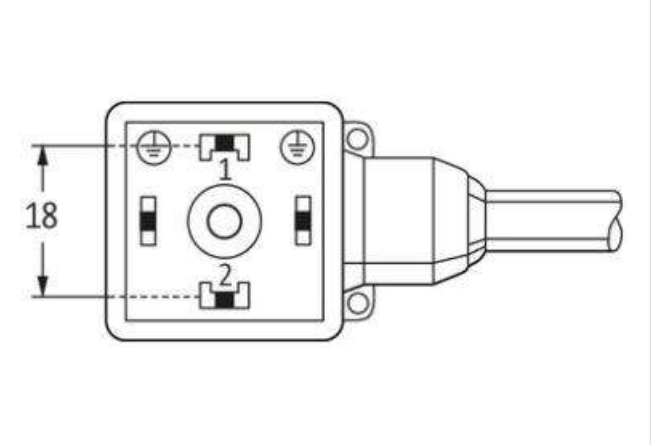

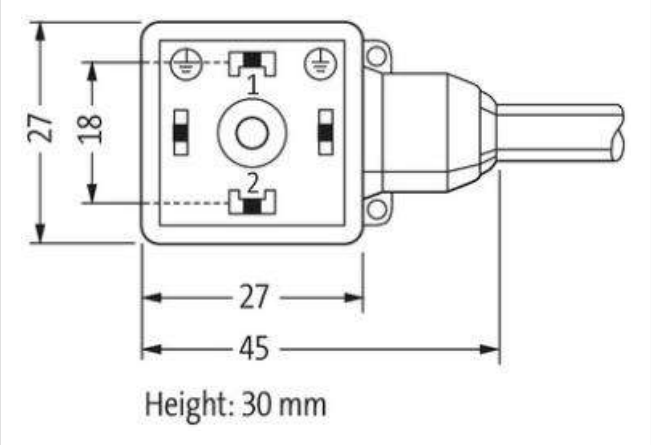

Product may differ from Image

Cable length	1,5 m
Side 1	
Tightening torque	0,4 Nm

The information in this Product-PDF has been compiled with the utmost care.
Liability for the correctness completeness and topicality of the information is restricted to gross negligence. Version: 2024-01-31

MURR ELEKTRONIK
stay connected

Mounting method	inserted, screwed
Family construction form	MSUD A
Thread	M3
Material	PBT
Degree of protection (EN IEC 60529)	IP67
Commercial data	
ECLASS-6.0	27279218
ECLASS-7.0	27279218
ECLASS-8.0	27279218
ECLASS-9.0	27060311
ECLASS-10.1	27060312
ECLASS-11.1	27060312
ECLASS-12.0	27060312
ETIM-5.0	EC001855
customs tariff number	85444290
GTIN	4048879194822
Packaging unit	1
Electrical data | Supply	
Operating voltage AC	24 V
Operating voltage AC min.	18 V
Operating voltage AC max.	30 V
Operating voltage DC	24 V
Operating voltage DC min.	18 V
Operating voltage DC max.	30 V
Current operating per contact max.	4 A
Diagnostics	
Status indication LED	yellow
Installation | Connection	
Mounting set	M3
Device protection | Electrical	
Additional condition protection degree	inserted, screwed
Pollution Degree	3
Rated surge voltage	0,8 kV
Material group (IEC 60664-1)	I
Mechanical data | Material data	
Coating locking	verzinkt
Coating of fitting	verzinkt
Color housing	black
Locking material	Steel
Material screw connection	Steel
Mechanical data | Mounting data	
Mounting method	inserted, screwed
Environmental characteristics | Climatic	
Operating temperature min.	-25 °C
Operating temperature max.	85 °C
Additional condition temperature range	depending on cable quality
Cable	
Cable identification	616
Cable Type	1 (PVC)
Approval (cable)	CE conform

The information in this Product-PDF has been compiled with the utmost care.
Liability for the correctness completeness and topicality of the information is restricted to gross negligence. Version: 2024-01-31

MURR ELEKTRONIK
stay connected

Cable weight [g/m]	61,6 g
Material wire	Cu wire, bare
Resistor (core)	max. 26 Ω/km (20 °C)
Single wire Ø (core)	0.2 mm
Construction (core)	24× 0.2 mm (multi-strand wire class 5)
Diameter (core)	3× 0.75 mm²
AWG	similar to AWG 18
Material wire isolation	PVC
Material property wire insulation	CFC-, cadmium-, silicone- and lead-free
Shore hardness wire isolation	43 ±5 D
Wire-Ø incl. isolation	1.8 mm ±5%
Color/numbering of wires	bk numbered, gnye longitudinally striped
Stranding combination	3 wires twisted
Shield	no
Material jacket	PVC
Material property (jacket)	CFC-, cadmium-, silicone- and lead-free
Shore hardness jacket	80 ±5 A
Outer-Ø (jacket)	5.9 mm ±5%
Color jacket	black
chemical resistance	good resistance to oil, gasoline and chemicals
Nominal voltage	300/500 V AC
Test voltage	3000 V AC
Current load capacity	to DIN VDE 0298-4
Temperature range (fixed)	-30...+70 °C
Temperature range (mobile)	-5...+70 °C
Bend radius (fixed)	5× outer Ø
Bend radius (moving)	10× outer Ø

The information in this Product-PDF has been compiled with the utmost care.
Liability for the correctness completeness and topicality of the information is restricted to gross negligence. Version: 2024-01-31